Aeropro CZ A240 / A220

MAINTENANCE MANUAL

Aeropro CZ A240/A220 MAINTENANCE MANUAL

standard with Rotax 912ULS engine, also
with section for A220 taildragger, and
with section for optional Rotax 914UL turbo engine

List of effective pages

Insert latest changed pages. Destroy superseded pages.
Note: Changed pages are indicated by the marking “changed” at the bottom of the page.

Dates of issue for original and changed pages are:
March 21, 2020

Total pages in this publication is consisting of the following:

Page No.				Change No.
Title			…….....	0
0-1	thru	0-4	…….....	0
1-1	thru	1-8	…….....	0
2-1	thru	2-11	…….....	0
3-1	thru	3-9	…….....	0
4-1	thru	4-8	…….....	0
5-1	thru	5-12	…….....	0
6-1	thru	6-7	…….....	0
7-1	thru	7-4	…….....	0
8-1	thru	8-4	…….....	0
9-1	thru	9-3	…….....	0
10-1	thru	10-23	for 912ULS engine.....	0
10a-1	thru	10a-13	for 914UL turbo engine.....	0
11-1	thru	11-6	for 912ULS engine.....	0
11a-0	thru	11a-5	for 914UL turbo engine.....	0
12-1	thru	12-2	…….....	0
13-1	thru	13-3	…….....	0
14-1	thru	14-8	…….....	0
15-1	thru	15-9	…….....	0
16-1	thru	16-1	…….....	0
17-1	thru	17-1	…….....	0
18-1	thru	18-1	…….....	0
19-1	thru	19-2	.....	0
20-1	thru	20-12	.....	0

Upon receipt of the second and subsequent changes to this book, personal responsible for maintaining this publication in current status should ascertain that all previous changes have been received and incorporated.

Table of contents

Foreword

This maintenance manual contains factory-recommended procedures and instructions for the ground handling, servicing and maintaining of the Aeropro CZ A240 tricycle-gear aircraft (and with supplemental information for the A220 taildragger). Besides serving as a reference for an experienced mechanic, this manual also covers some step-by-step procedures for the less experienced person. This manual should be kept in a handy place for ready reference. If properly used, it will better enable the mechanic to maintain the Aeropro CZ A240/A220 aircraft and thereby establish a reputation for reliable service.

All information contained is based on data available at the time of publication and is supplemented and kept current by service bulletins published by the Aeropro CZ Company. These bulletins are sent to all Aeropro Aircraft Dealers so that they have the latest authoritative recommendations for servicing Aeropro aircraft. Therefore it is recommended that owners of Aeropro aircraft utilize the knowledge and experience of the factory-trained Dealer Service.

The Aeropro Service Bulletins can be found on the Aeropro web site at... http://www.aeropro.cz

The latest-version Aeropro Inspection Checklist can be found on a web page at…
www.aerotrek.aero/aerotrek-tips.htm

Common conversions and abbreviations

Units of length	1 mm = 0.03937 in 1 in = 25.4 mm 1 ft = 0.3048 m
Units of area	1 cm^2 = 0.155 sq in 1 sq in = 6.4516 cm^2
Units of volume	1 cm^3 = 0.06102 cu in 1 cu in = 16.3871 cm^3 1 gal (US) = 3.7854 l (dm^3)
Units of mass	1 kg = 2.2046 lb 1 lb = 0.45359 kg
Units of force	1 N = 0.224809 lbf 1 lbf = 4.4482 N
Units of pressure	1 bar = 1000 hPa 1 bar = 14.5037 lbf/in2 (psi) 1 lbf/in2 (psi) = 0.0689 bar 1 in HG = 33.8638 hPa
Units of temperature	°C = (°F – 32) / 1.8 °F = (°C x 1.8) + 32
Velocities	1 m/s = 3.6 kph 1 ft/min = 18.288 m/s 1 m/s = 0.0555 ft/min 1 kts = 1.852 kph 1 kph = 0.53996 kts
Torques	1 Nm = 8.848 In.lb. 1 in.lb. = 0.113 Nm 1 ft.lb. = 1.356 Nm

note: This Maintenance Manual is for the A240 with standard Rotax 912ULS engine. When the aircraft is an A220, this Maintenance Manual includes an additional section relevant to the A220 taildragger. And/or when the aircraft is equipped with the optional Rotax 914UL turbo engine, this Maintenance Manual includes additional sections relevant for the 914UL engine.

Section 1

General Description

Table of contents **Page**

1.1 General description

1.2 Description

The Aeropro aircraft, as described in this manual, are conventional high wing aircraft. The main supporting structure of the fuselage is of lattice-work welded of steel tubes. The A240 aircraft is a fixed tricycle landing gear with a steerable nose wheel. A two place, side by side seating configuration is standard. Each aircraft is equipped as standard with a 4-stroke, four-cylinder, horizontally-opposed, water cooled Rotax 912ULS 100-hp engine, driving a three-blade propeller. The Rotax 914UL turbo-charged engine is an option.

1.3 Aircraft specifications

Primary specifications of the aircraft, with dimensions based on gross weight, are given in figure 1-1. If these dimensions are used for constructing a hangar or computing clearances, remember that such factors as tire pressure or load distributions may result in some dimensions that are somewhat different from those listed.

Figure 1-1.

Gross weight	1235 lb
Fuel capacity	22 gal.
Oil capacity	0.79 gal.
Engine model (Refer to Section 11 for Engine Data)	Rotax 912 ULS
Propeller	3-blade
Main wheel tires	15x6.00x6 (standard tires)
Pressure	29 psi (standard tires)
Nose wheel tire	12x4
Pressure	29 psi
Aileron travel Up	18°, +/- 2°
Down	8.5°, +/- 1°
Wing flap travel	0° to 20°, +/- 2°
Rudder travel Right	27°, +/- 2°
Left	27°, +/- 2°
Elevator travel Up	35°, +/- 2°
Down	27°, +/- 2°
Elevator trim tab travel Up	15°, +/- 3°
Down	50°, +/- 3°
Principal dimensions	
Wing span	29.9'
Length with prop spinner	18.5'
Vertical stabilizer height	7.3'
Track width	4.5'
Tail span	7.8'
Battery location	under right seat

1.4 Torque values

A chart of recommended nut torque values is shown in figure 1-2. These torque values are recommended for all installation procedures contained in this manual, except where other values are stated. They are not to be used for checking tightness of installed parts during service.

Figure 1-2.

M4	4 Nm / 35 in.lb.
M5	6 Nm / 53 in.lb.
M6	10 Nm / 88 in.lb.
M8	24 Nm / 212 in.lb.
M10	35 Nm / 310 in.lb.

1.5 Tire inflation pressure

Maintain tire pressure at the air pressures specified in figure 1-1. When checking the tire pressure, examine the tires for wear, cuts, bruises and leakage. Remove oil, grease and mud from the tires with soap and water.

1.6 Approved oils and capacities

In general we recommend referring to the latest Rotax 912-series engine operators manual to check for a suitable engine oil. In the United States, only Aeroshell Sport 4 oil is recommended.

1.7 Equipment list

In figure 1-5 a list of the factory installed equipment is provided. Additionally installed equipment and alterations have to be considered when performing the weight and balance calculation. If a ballistic recovery system is installed from the factory, this is already included in the factory weight and balance calculation form.

Figure 1-5
Factory installed typical equipment

airspeed indicator, altimeter, vertical speed indicator, compass, slip indicator
RPM gauge (EIS)
oil pressure gauge (EIS)
oil temperature gauge (EIS)
fuel pressure gauge (Rotax)
H2O (water) temperature gauge (EIS)
exhaust gas temperatures gauge (EIS)
strobe and position lights (Whelen Microburst-III)
radio, intercom and transponder equipment
master, avionics and engine kill (ignition) switches
electrical system including circuit breakers
4-Point safety belts (pilot and passenger)

1.8 Weight and Balance information

To perform a successful weight and balance calculation, the center of gravity "C.G." has to be determined with all the installed equipment, including engine oil, cooling liquid being considered, but without fuel. Figure 1-6. shows how to conduct the C.G. determination. All measurements including a listing of all the installed equipment has to be noted in the separate weight and balance calculation form (an example is given in figure 1-7). This form has to be placed in the aircraft, so every pilot will be able to conduct his specific weight and balance calculation prior to each flight.

1.8.1 Center of gravity determination

To get the correct values, it is necessary to put the aircraft on three weighing scales located on a level surface. To get the total weight G you have to add weight G1 and G2. The center of gravity has to be calculated using this value. The C.G. is located at the distance (X) behind R.P. (leading edge) near the fuselage (see figure 1-6.).photo showing aircraft weighing

1.8.2 CG - calculation

A specific C.G.-calculation recommendation which has to be carried out prior to each flight is provided in the Pilot Operating Handbook, Section 4.

Figure 1-6

note: *illustration below is for Aeropro aircraft prior to s/n 18106 - see individual aircraft documents for illustration appropriate for any specific aircraft*

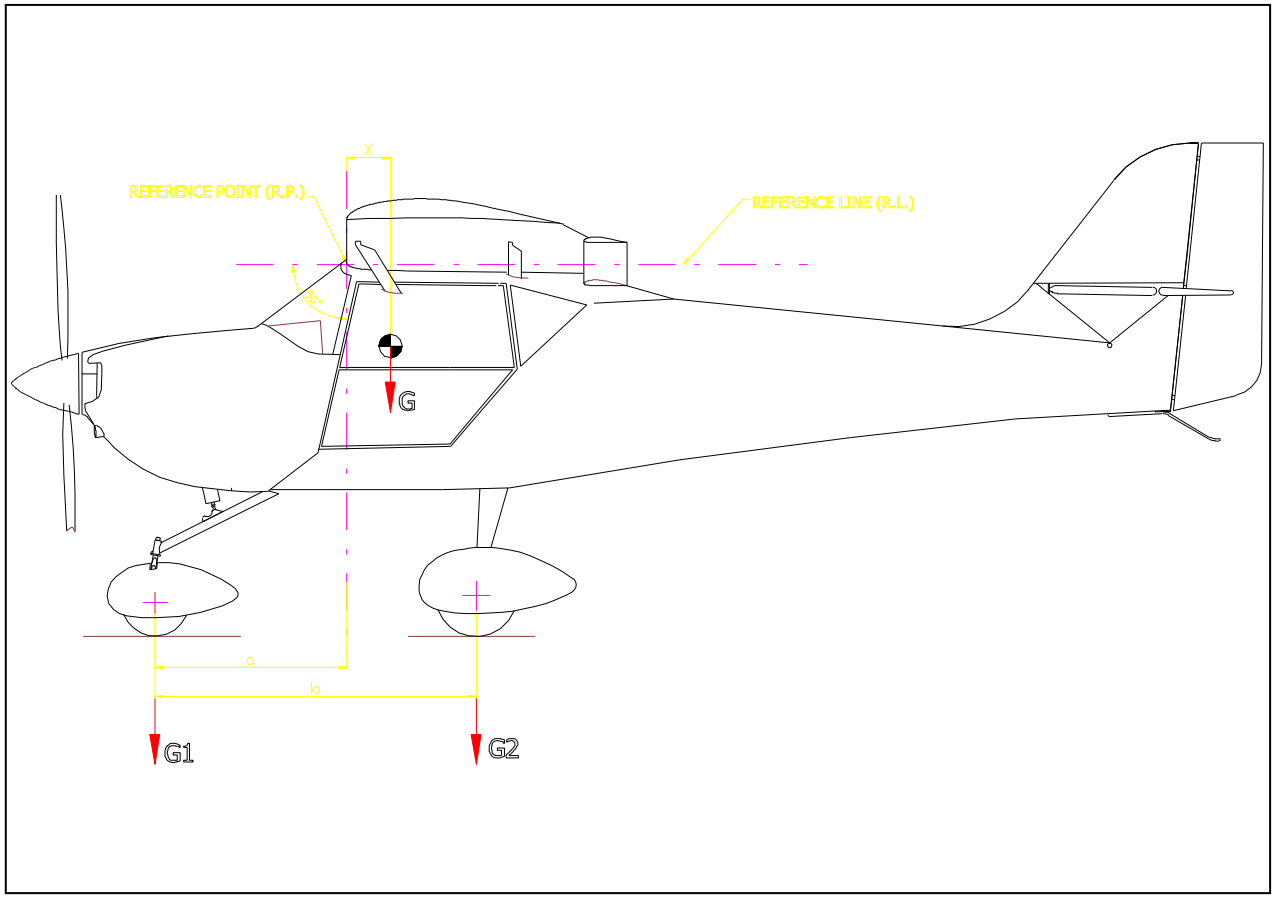

Figure 1-7

WEIGHT AND CG POSITION RECORD

Serial Number: _____ **Registration:** _____

Aircraft leveling:

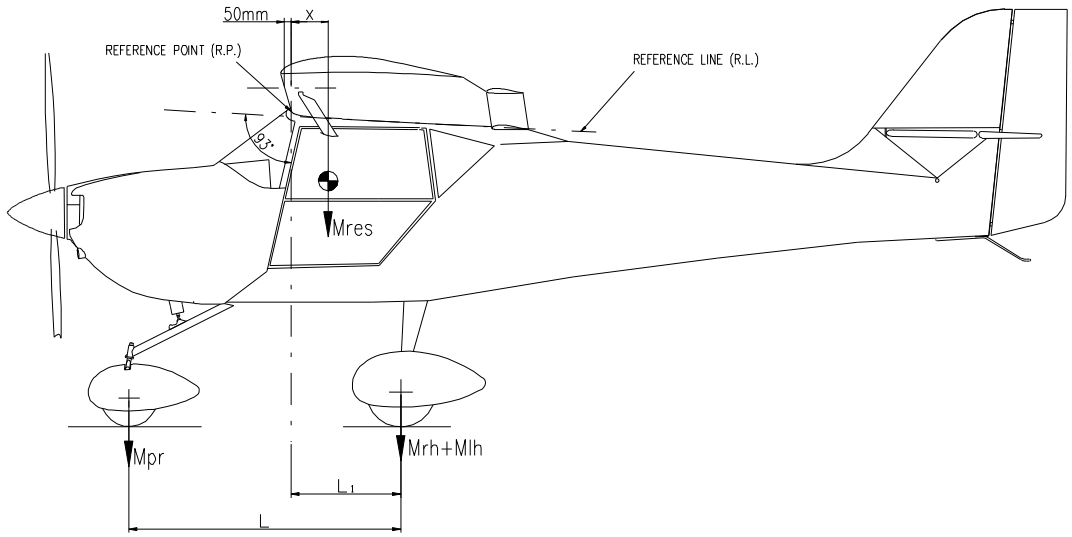

Values Weighed:

Main wheel	Starboard side:	M_{rh} =	kg	L =	mm
	Port side:	M_{lh} =	kg	L_1 =	mm
Nose wheel		M_{pr} =	kg		
Result weight		M_{res} =	kg		

CG position

$B = (M_{pr} * L)/M_{res} =$ [mm]

$X = L_1 - B + 50 =$ [mm]

$\bar{X} = (x * 100)/1300) =$ [% MAC]

Date: Performed by:

1.9 Sources to purchase parts

In figure 1-8. sources to purchase spare parts and disposable parts are given. When in doubt, ask your Aeropro distributor.

Figure 1-8.

Part description	Sources
Airframe and Engine Components……	Aeropro CZ Hlavní 439, 687 25 HLUK Czech Republic phone: (+420) 572 582 194 fax: (+420) 572 582 195 e-mail: aeroprocz@seznam.cz Aerotrek Aircraft Rollison Light Sport Aircraft, Inc. 34 E. Antioch Road Bloomfield, IN 47424 USA phone: 812-384-4972 e-mail: info@aerotrek.aero web: www.aerotrek.aero
Engine Components……	Refer to ROTAX Engine Operator´s Manual 912 Series, Section 14 or for 914UL turbo engine, Manual 914 Series

1.10 Disposable replacement parts

A listing of disposable replacement parts which require replacement at regular servicing intervals is given in figure 1-9. Details of where to purchase replacement parts are shown in figure 1-8. When damage is found on any part of the aircraft please contact your Aeropro distributor when in any doubt about replacement or repair. No repairs must be done to any of the listed parts due to flight safety!

Figure 1-9

part description or location	part description
engine compartment……	Rotax oil filter element gasket for oil filter gasket for oil drain screw air cleaner element all gaskets in general exhaust system retaining springs self-locking nuts in general propeller screws engine mount screws engine shock mounts throttle control cables
other specific engine components……..	refer to Rotax Engine Maintenance Manual.
propeller……	refer to propeller Operators Manual
landing gear……	tires and tubes cotter pins in general hydraulic line fittings self-locking nuts in general brake pads brake discs all wheel and landing gear components when damaged in general
airframe……	self-locking nuts in general cotter pins in general

1.11 General safety information

This aircraft should never be operated at locations, airspeeds, altitudes or other circumstances from which a successful no-power landing cannot be made, after sudden engine stoppage. This aircraft must only be flown at VFR (daylight) conditions and it is not approved for acrobatics.

Whether you are a qualified pilot or a novice, complete knowledge of the aircraft, its controls and operation is mandatory before venturing solo. Flying any type of aircraft involves a certain amount of risk. Be informed and prepared for any potentially hazardous situation associated with flying.

A recognized training program and continued education for piloting an aircraft is absolutely necessary for all aircraft pilots. Make sure you also obtain as much information as possible about your aircraft, its maintenance and operation from your dealer.

Respect all government or local rules pertaining to flight operation in your flying area. Fly only when and where conditions, topography and airspeeds are safest and legal. Select and use proper aircraft instrumentation -- only approved instrumentation may be installed.

Before flight, ensure that all engine controls are operative. Make sure all controls can be easily reached in case of emergency.

Unless in a suitable run up area, never run the engine with the propeller turning while on the ground. Do not operate engine if bystanders are close.

In the interest of safety, the aircraft must not be left unattended while the engine is running.

Keep an aircraft log and respect engine and aircraft maintenance schedules. Keep the engine in top operating condition at all the times. Do not operate any aircraft which is not properly maintained or has engine operating irregularities which have not been corrected.

Since special tools, equipment and certification may be required, servicing should only be performed by repairmen specified in this manual.

To eliminate possible injury or damage, ensure any loose equipment or tools are properly secured before starting the engine.

When in storage, protect the engine and fuel system from contamination and exposure.

Certain areas, altitudes and conditions present greater risk than others. The engine may require carburetor recalibration or humidity or dust/sand preventive equipment, or additional maintenance may be required.

Never operate the engine and gearbox without sufficient quantities of lubricating oil. Periodically verify level of coolant.

Never exceed maximum rated rpm. Allow the engine to cool at idle for several minutes before turning off.

1.12 Reporting possible safety of flight concerns during inspection

If any concerns about safety of flight are found during inspection or maintenance this must be reported in the inspection form (refer to Section 2). If in doubt about the airworthiness of the aircraft, it is strongly recommended to contact your Aeropro distributor. The aircraft must not be flown unless concerns about flight safety are resolved completely.

Section 2

Ground handling, servicing, lubrication and inspection

Table of contents **Page**

2.1 Ground Handling

2.2 Towing the aircraft

Moving the aircraft by hand is done by using the wing struts and landing gear struts as push points. Since there is no tow bar applicable at the nose gear, you have to press down and hold on the left side of fuselage adjacent to the fin to raise the nose wheel off the ground. With the nose wheel clear of ground, the aircraft can be turned by pivoting it about the main wheels.

2.3 Hoisting

The aircraft may be lifted by points designed for this purpose - the aircraft rear section may be lifted by hand by use of the grip rail on the left side of the fuselage, or by the underside of the rear fuselage lattice-work, preferably by use of tube gussets if possible, so that the fuselage part being lifted can be supported with a soft pad on the lattice-work tubes of the fuselage, or on a stand under the tail-wheel landing gear. The aircraft must be chocked on all wheel to prevent any undesirable movement. Load relief of landing gear one side. To relieve the load on one side of the landing gear, lift that side of the aircraft by the wing strut attachments points to the required height. This method cannot be applied for a long-term aircraft supporting, it may be used for a momentary, short-term lifting of the aircraft only. When jacking the whole of the aircraft firstly make ready a block padded on one side with a soft material. We will use this block to support transversely the front part of the fuselage and, using two jacks, jack the aircraft fuselage up to the required height. Furthermore, prepare a fixing stand to be located underneath the aircraft, thus assuring stable support and positioning for the whole aircraft. To jack-up the aircraft, you can also use special jacking stands designed for large aircraft if the size and frame configurations are appropriate.

2.4 Jacking

Refer to paragraph 2.3. The aircraft does not feature further jacking points except for changing main wheels. Doing so requires one person to lift the aircraft by pushing up at the points where the struts connect to the wing, while a second person has to put a jack beneath the main wheel axle. A piece of foam must be inserted between the jack and the wheel axle so that no damage will occur to the paint.

2.5 Parking

Parking precautions depend principally on local conditions. As a general precaution, apply the parking brake or chock the wheels and lock the controls. It is often found a safe precaution to tie down the aircraft as outlined in paragraph 2.6. if a hangar is not available even in weather not deemed a threat to the aircraft. Weather conditions often change rapidly and many aircraft have been saved by the use of tie downs.

Caution	Do not apply the parking brakes during cold weather (when accumulated moisture may freeze the brakes) or when brakes are overheated.

2.6 Tie-down

When parking the aircraft in the open, point the aircraft into wind if possible. Secure control surfaces by using suitable locks or clamps and set brakes.

After completing this procedure, proceed to tie the aircraft down as follows:

Tie ropes to the wing tie-down fittings (strut-wing attachment point). Secure the opposite ends of ropes to the ground anchors.

Secure a tie-down rope (no chains or cables) to the exposed propeller shaft (between the cowling and the spinnner) and secure the opposite end of the rope to a ground anchor.

Secure the middle of a rope to the tail tie-down ring. Pull each end of rope away at a 45-degree angle and secure to ground anchors at each side of tail.

Secure controls to the rearward position by using the seat belts.

2.7 Flyable storage

Flyable storage is defined as a maximum duration of 30 days non-operational storage and/or the first 20 hours of intermittent engine operation.

During the 30 day non-operational storage or the first 20 hours of intermittent engine operation, every seventh day the propeller should be rotated through 10 revolutions, without running the engine. If the aircraft is stored outside, tie-down in accordance with paragraph 2.6. In addition, the pitot tube, static airvents, air vents, openings in the engine cowling, and or similar openings should all have protective covers installed to prevent entry of any foreign material. After 30 days, aircraft should be flown for 30 minutes or ground run-up until oil has reached operating temperature.

2.8 Returning aircraft to service

After flyable storage, returning the aircraft to service is accomplished by performing a thorough pre-flight inspection. At the end of the first 20 hours of engine operation, drain engine oil and replace external oil filter element. Service engine with correct grade and quantity of engine oil. Refer to figure 1-3. and paragraph 1.6 for correct grade of engine oil.

2.9 Temporary storage

Temporary storage is defined as an aircraft in a non-operational status for a maximum duration of 90 days. The aircraft is made from metal material, composite materials and a fabric surface. This construction will allow the aircraft to be stored for long periods of time without damage to the airframe. Nevertheless we recommend to store the aircraft in a dry hanger to keep paintwork and metal parts in good condition. For storage periods not exceeding 90 days, the following methods of treatment are suggested:

a. Fill fuel tank with correct grade of gasoline.
b. Clean and wax aircraft thoroughly.
c. Clean any oil or grease from tires and coat tires with a tire preservative. Cover tires to protect\ against grease and oil.
d. Rotate wheels every 30 days to change supporting points and prevent flat-spotting the tires.
e. Seal or cover all openings which could allow moisture and/or dust to enter.
f. Remove battery (see paragraph 15.17) and store in a cool dry place, charge battery as required.
g. Seal all engine openings exposed to the atmosphere using suitable plugs or none-hygroscopic tape. Attach a red streamer at each point that a plug or tape is installed.
h. If the aircraft is to be stored outside, perform the procedures outlined in paragraph 2.6. In addition, the pitot tube, static ports, air vents, openings in the engine cowling and other similar openings should have protective covers installed to prevent entry of foreign material.
i. Attach a warning placard to the propeller to the effect that the propeller should not be moved while the engine is in storage state.

2.10 Inspection during storage

Remove dust accumulations from airframe as frequently as possible, clean and wax as required.

2.11 Returning aircraft to service

After temporary storage, use the following procedures to return aircraft to service:

a. Check tires for proper inflation.
b. Check battery and install.
c. Check the oil sump has proper quantity of engine oil (Refer to Pilot Operating Handbook and/or Rotax Operator´s Manual for instructions).
d. Service induction air filter and remove warning placard from propeller.

e. Remove materials used to cover openings.
f. Check fuel tank and fuel lines for moisture and sediment, drain enough fuel to eliminate any possible moisture and sediment within the fuel system.
g. Perform a thorough pre-flight inspection, then start and warm-up engine.

2.12 Servicing

Servicing requirements are shown in figure 2-2. The following paragraphs supplement this figure by adding details not included in the figure.

2.13 Fuel

Fuel tank should be filled immediately after flight to lessen moisture condensation. Tank capacity is listed in Section 1. The recommended fuel grade to be used is given in figure 2-2.

2.14 Fuel drains

A fuel drain is located at the bottom of the fuselage. The drain valve is accessed from beneath the fuselage adjacent to the main left-hand undercarriage leg. To activate the drain, push the metal tube upwards.

2.15 Engine oil

To check the engine oil, use the oil dipstick located in the oil tank on the right hand side of the firewall. The level should be check immediately after the engine has been stopped and the propeller turned in the operational direction until a bubbling noise can be heard from the oil expansion tank. **PLEASE ENSURE THAT THE IGNITION SWITCHES ARE DOWN AND THE KEY IS REMOVED BEFORE TURNING THE PROPELLER!** This is the only way to the engine oil level correctly. (Refer also to the ROTAX Engine Operator's Manual).

Engine oil should be drained while the engine is still hot so that more positive draining is obtained. Refer to the inspection charts for required intervals for oil and filter changes. Change oil at least every 12 months even if less than the specified hours have accumulated. Reduce this period for prolonged operation in dusty areas, in cold climates where sludging conditions exist, or where short flights and long idle periods are encountered, which cause sludging conditions.

Caution	Never operate with less than the minimum engine oil level on the dipstick marking.

2.16 Engine induction air filter

The induction air filter keeps dust and dirt from entering the induction system. Maintaining the air filter in a good clean condition is extemely important as contaminated air is responsible for considerable amounts of wear on the engine. The filter should be removed, inspected and cleaned as necessary at least every 50 hours and more frequently if warranted by use in non-ideal operating conditions. Due to reasons of flight safety the filter should be replaced after using 100 hours of engine operation time or one year, whichever should occur first.

Caution	The filter has to be replaced if damaged, if in doubt, the filter has to be replaced as a precaution to flight safety. Be sure air box is clean before installing a new filter.

2.17 Battery

The installed battery needs no further servicing, except checking cable connections. It is important to check battery voltage when the aircraft is out of service for more than two weeks. Battery voltage has to maintain at least 12.0 volts without engine running and all equipment switched off and master switch in "off" position (regular voltage 12.5 volts). If voltage does indicate 12.2 volts or less it has to be charged. Charging instructions can be found on the battery. If battery voltage is less than 11.8 volts a replacement battery may be required.

2.18 Tires

Maintain the tire pressures at the air pressure specified in figure 1-1. When checking tire pressure, examine tires for wear, cuts, bruises and spillage. Remove oil, grease and mud from tires with soap and water.

Note	Recommended tire pressures should be maintained. Especially in cold weather, remember that any drop in temperature of the air inside a tire causes a corresponding drop in air pressure.

Figure 2-1 - Rotax 912ULS engine installation

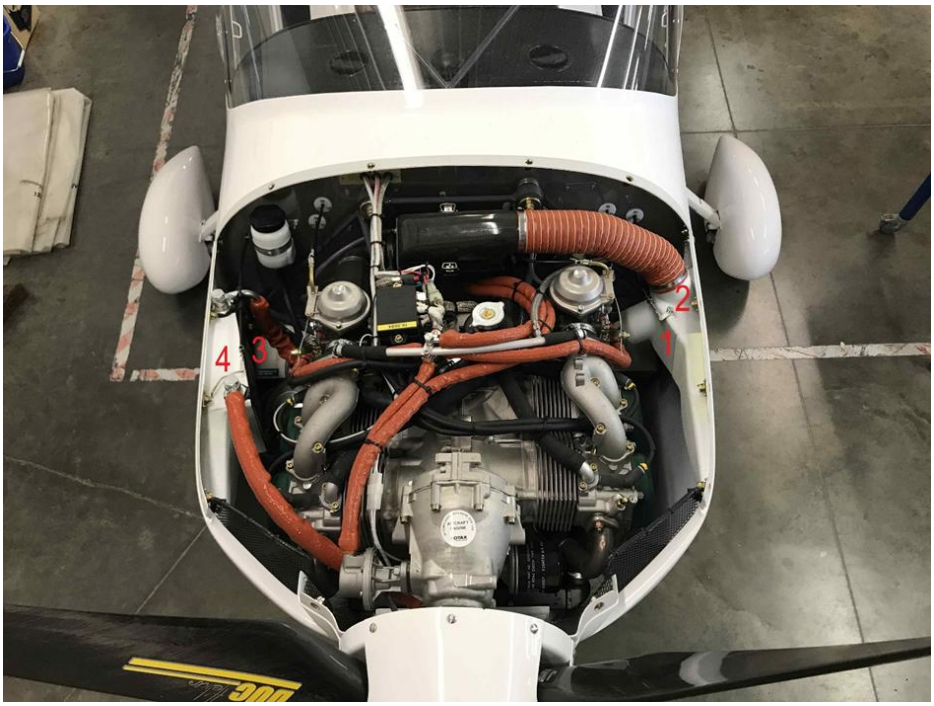

1. Controls lever for carburetor heat
2. Clip for elastic air tube
3. Holder for oil cooler –one screw M5
4. Oil cooler

Figure 2-2

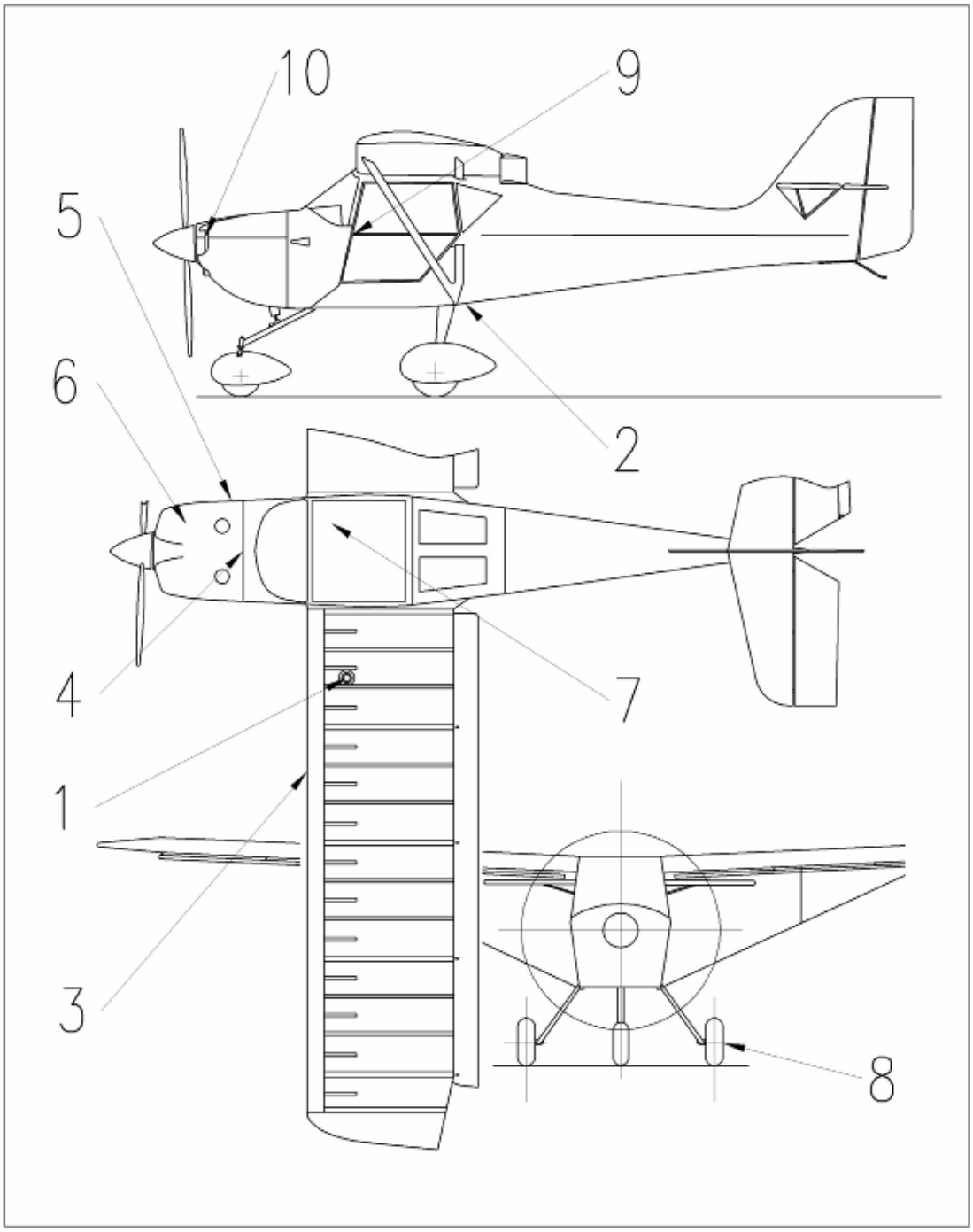

Figure 2-2

Daily

1 Fuel tank filler
Service after each flight. Keep full to reduce the possibilty of condensation in the fuel tank. Refer to paragraph 2.13.

2 Fuel tank sump drain
Drain off sufficient amount to test for water or sediment contamination before first flight of the day.

3 Pitot port
Check for damage, alignment and blockages before first flight of the day.

4 Induction air filter
Inspect and service regularly, give extra consideration when in dusty conditions. Refer to paragraph 2.16 for details.

5 Oil dipstick and oil filler cap
Check oil during pre-flight. Add oil if necessary. Check base of cap for water contamination. Refer to paragraph 2.15 for details

10 Engine cooling system
Check water level on preflight. Add specified coolant as required. Refer to the POH and latest engine manufacturer's manual for details.

First 25 hours

6 Engine oil system
Drain and refill Oil with recommended engine oil grade, replace oil filter.

100 hours

4 Induction air filter
Clean filter per paragraph 2.16, replace as required.

7 Battery
Check for correct voltage level. Charge or replace if required. Refer to paragraph 2.17 for details.

8 Tires
Maintain correct tire inflation as listed in figure 1-1. Also refer to paragraph 2.18 for details.

200 hours

9 Brake master cylinder
Check fluid level and refill as required with DOT 4 automobile brake fluid. Refer to paragraph 2.19 for details.

2 Fuel tank sump drain
Drain sufficient amount to check for trances of water or sediment, refer to paragraph 2.14 for details.

2.19 Hydraulic brake system

Check brake master cylinder and refill with correct grade of brake fluid. To refill, DOT 4 automobile brake fluid is required, as specified in the inspection chart, and no aircraft hydraulic fluid should ever be used. Bleed the brake system to remove entrapped air whenever there is a spongy response to the brake lever. Refer to paragraph 5.40 for filling and bleeding the brake system.

2.20 Cleaning

Keeping the aircraft clean is important. Besides maintaining the appearance of the aircraft, cleaning makes inspection and maintenance easier and in some occasions may highlight defects missed in a pre-flight inspection.

2.21 Windshield and windows

Windows should be cleaned carefully with plenty of fresh water and a mild detergent, using the palm of the hand to feel and dislodge any caked dirt or mud. A soft cloth, or microfiber towel may be used, but only as a means of carrying water to the acrylic. Rinse thoroughly, then dry with a clean moist chamois. Do not rub the acrylic with a dry cloth as this builds up an electrostatic charge which attracts dust. Oil and grease may be removed by rubbing lightly with a soft cloth moistered with a suitable solvent. Always use vertical strokes to prevent glare scratches.

Caution	When cleaning the windshields, do NOT use gasoline, alcohol, benzene, acetone, carbon tetrachloride, fire extinguisher fluid, de-icer fluid, laquer thinner, or glass window cleaning spray. These solvents will soften and craze the acrylic windows. After washing, the acrylic windshield and windows should be cleaned with an aircraft windshield cleaner. Apply the cleaner with soft cloths and rub with moderate pressure. Allow the cleaner to dry, then wipe it off with soft flannel cloths. A thin, even coat of special acylic window polish will fill-in minor scratches and help prevent any further scratching. Do not use a canvas cover on the windshield or windows unless freezing rain or sleet is anticipated since the cover may scratch the acrylic surface.

Caution	Do not use any laquer polish like carnauba wax on the acrylic windows.

2.22 Plastic trim

Cleaning the instrument panels plastic trim and control levers need only be wiped with a damp cloth. Oil and grease on the control sticks and control levers can be removed with a cloth moistened with a suitable solvent. Volatile solvents, such as mentioned in paragraph 2.21. should never be used since they soften and craze the plastic.

2.23 Painted surfaces

The painted exterior surfaces of the aircraft, under normal conditions, require a minimum of polishing and buffing. Generally, the painted surfaces can be kept bright by washing with water and mild soap, followed by a rinsing ther surfaces with water and drying with cloths or chamois. Harsh or abrasive soaps or detergents which could cause scratches should never be used. After the curing period, the aircraft may be waxed with a good automotive wax. A heavier coating of wax on the leading edge of the wing and tail and on the engine cowling will help reduce the abrasion encountered in these areas.

2.24 Aluminum surfaces

Some aluminum surfaces will require a minimum of care due to their anodized coating, but should never be neglected. Many good aluminum cleaners are available from commercial suppliers of aircraft products. Household type detergent soap powders are effective cleaners, but should only be used very cautiously since many of them are strongly alkaline and will cause damage.

2.25 Engine and engine compartment

The engine should be kept clean since dirty cooling fins may cause engine overheating. Also, cleaning is essential to minimize any danger of fire and provide for easier inspection of components. The entire engine cowling may be removed to facilitate engine and interior cowl cleaning. Wash down the engine and components with a suitable solvent, then dry thoroughly with compressed air if available.

Caution	Particular care should be given to electrical equipment before cleaning. Solvent should not be allowed to enter magnetos, starter, alternator, voltage regulator and the like. Hence, these components should be protected before saturating the engine with solvent. Any fuel, oil and air openings should be covered before washing the engine with solvent. Caustic cleaning solutions should not be used. After cleaning engine re-lubricate all control arms and moving parts.

2.26 Upholstery and interior

Keeping the upholstery and interior clean prolongs upholstery fabric and interior trim life. To clean the interior, proceed as follows:

a. Brush or vacuum clean the upholstery and carpet to remove dust and dirt.
b. Clean upholstery with a sponge moistened with fresh water
c. Wipe plastic trim with a damp cloth.
d. Oil spots and stains may be cleaned using household spot removers, sparingly. Before using any solvent, read the instructions on the container and test it on an obscure place in the fabric to be cleaned. Never saturate the fabric with volatile solvent; it may damage the padding and backing material. Scrape sticky material from the fabric with a dull knife, then spot clean the area.

2.27 Propeller

Wash hub and blades with a soft cloth and water (and with a mild detergent if necessary), then dry thoroughly.

Caution	Do not use gasoline, alcohol, benzene, acetone, or laquer thinner. These solvents will soften and damage the propeller finish.

2.28 Wheels

The wheels should be washed periodically and examined for corrosion, cracks and dents in the wheel halves or hubs. If defects are found, remove and repair in accordance with Section 5. Discard cracked wheel hubs and install new parts.

2.29 Lubrication

The A240 has been designed to have as few lubrication points as possible. For areas that do require lubrication, regular grease should be used. The following list details the areas that will require occasional lubrication.

a. wing main bolts
b. wing folding mechanism hinge
c. wing flap push-pull rods connection and hinges
d. stabilizer mounting bolts
e. all control surface hinges in general
f. undercarriage bearing and movable holder

Caution	Do not lubricate pulleys and bushings of control surface cables and rods. When changing wheels it is recommended to lubricate wheel axles before reassembling to prevent them from corrosion and keep wheel changing easier.

2.30 Inspection

I. Inspection requirements

As required by Federal Aviation Regulations, all civil aircraft of U.S. registry must undergo a complete inspection (annual) each twelve calendar months. In addition to the required Annual Inspection, aircraft operated commercially (for hire) must also have a complete aircraft inspection every 100 hours of operation.

II. Inspection charts

The latest-version AEROPRO INSPECTION CHECKLIST is always available at no charge from the U.S. Aeropro distributor – contact the distributor for the latest-version which is normally available on the distributor's web page at... www.aerotrek.aero/aerotrek-tips.htm

As shown in the charts, there are items to be checked after the first 25 hours of service, each 100 hours and 200 hours, etc.

To conduct these inspections it is mandatory to use the factory inspection form (**AEROPRO INSPECTION CHECKLIST**) **note:** Latest-version checklist always available on the web page at...
www.aerotrek.aero/aerotrek-tips.htm

a. When conducting the initial 25 hour inspection, all items marked as 25 hour service would be inspected, serviced or otherwise accomplished as necessary to insure continued airworthiness.

b. At each 100 hours, the 25 hour items would be accomplished in addition to the items marked as 100 hour service as necessary to insure continued airworthiness.

c. At each 200 hours, the 100 hour items would be accomplished in addition to the items marked as 200 hour service as necessary to insure continued airworthiness.

d. The numbers appearing in the "special inspection item" (S.i.i.) column refer to data listed at the end of the inspection charts. These items should be checked at each inspection interval to insure that applicable servicing and inspection requirements are accomplished at the specified intervals.

e. A complete aircraft inspection includes all 25, 100 and 200 hour items plus those special inspection items which are due at the time of the inspection.

III. Inspection guidelines

a. Moveable parts for: lubrication, servicing, security of attachment, binding, excessive wear, safety, proper operation, proper adjustment, correct travel, cracked fittings, security of hinges, defective bearings, cleanliness, corrosion, deformation, sealing and tension.

b. Fluid lines and hoses for: leaks, cracks, dents, kinks, chafing, proper radius, security, corrosion, deterioration, obstruction and foreign matter.

c. Metal parts for: security of attachment, cracks, metal distortion, broken spotwelds, corrosion, condition of paint and any other apparent damage.

d. Composite parts for: cracks, dents and de-lamination.

e. Wiring for: security, chafing, burning, defective insulation, loose or broken terminals, heat deterioration and corroded terminals.

f. Bolts in critical areas for: correct torque in accordance with torque values given in the chart in Section 1, when installed or when visual inspection indicates the need for a torque check.

Caution	Torque values listed in Section 1 are derived from oil-free cadmium-plated threads and are recommended for all installation procedures contained in this manual except where other values are stated. They are not to be used for checking thightness of installed parts during service.

g. Filters and fluids for: cleanliness, contamination and/or replacement at specified intervals.

h. Aircraft file: Miscellaneous data, information and licences are a part of the aircraft file. Check that the following documents are up-to-date and in accordance with current Federal Aviation Regulations. Most of the items listed are required by the United States Federal Aviation Regulations.

To be displayed in the aircaft at all times:

1. Aircraft Airworthiness Certificate
2. Aircraft Registration Certificate

To be carried in the aircraft at all times:

1. Weight and Balance and associated papers (latest copy of the Repair and Alteration Form if applicable)
2. Aircraft Equipment List

To be available upon request:

1. Aircraft Log Book

i. Engine run-up

Before beginning the step-by-step inspection, the pilot should start, run-up and shut down the engine in accordance with instructions in the Pilot Operating Handbook. During run-up, observe the following, making note of any discrepancies or abnormalities. It is strongly recommended that the “static-test-report form” included in the **AEROPRO Checklist – B Service/maintenance** form is used during any run up inspection.

1. engine temperatures and pressures
2. static rpm
3. magneto drop
4. engine response to changes in power
5. any unusual engine noises
6. fuel shut-off valve function
7. idling speed
8. charge control and battery voltage

After the inspection has been completed, an engine run-up should again be performed to determine that any discrepancies or abnormalities have been corrected.

IMPORTANT

These charts may only be used accompanied by the latest-version special factory inspection form: AEROPRO Inspection Checklist

for the latest-version AEROPRO INSPECTION CHECKLIST contact the U.S. Aeropro distributor or see the latest-version checklist available on the web page... www.aerotrek.aero/aerotrek-tips.htm

---

Section 3

Structures – Fuselage

Table of contents Page

3.1 Fuselage

The main supporting structure of the fuselage is a lattice-work welded of steel tubes. The cockpit is located in the middle section of the fuselage and is accessible through large, vertically opening doors hinged on to the top of the door frames. The aircraft is a side by side two seat configuration, the seats being constructed of a fiberglass frame with fabric upholstery. Pilots are fastened with four-point safety belts anchored to the fuselage framework. The engine is located in front of the cockpit, separated from the cockpit by the firewall. The nose of the fuselage consists of a two piece fiberglass engine cowling.

The rear fuselage section consists of the attachment points for the tail fin and the horizontal stabilizer. On the upper fuselage behind the wing is located a detachable cover allowing the wings to fold backward. The whole fuselage surface except for the forward section is fabric-covered.

3.2 Windshield and Windows

3.3 Description

The cockpit skylights and doors are of polycarbonate (Lexan) material. The windshield is of acrylic (Plexiglass) material and is glued and riveting to the fuselage supported by aluminium plates to achieve the best possible aerodynamics and eliminate wind noise.

3.4 Cleaning

Refer to Section 2.

3.5 Waxing

Waxing will remove minor scratches in clear plastic and help protect the surface from further abrasion. Use a good grade of commercial wax applied in a thin, even coat. Bring wax to a high polish by rubbing lightly with a clean, dry flannel cloth.

3.6 Repairs of Windshield

Damaged window panels and windshield may be removed and replaced if damage is extensive. However, certain repairs as prescribed in the following paragraphs can be made successfully on the acrylic front windshield without removing the damaged screen from aircraft. Three types of temporary repairs for cracked plastic are possible. No repairs of any kind are recommended on highly-stressed or compound curves where repair would be likely to affect pilot's field of vision. Curved areas are more difficult to repair than flat areas and any repaired area is both structurally and optically inferior to the original surface.

3.7 Scratches

Scratches on clear acrylic (but not polycarbonate) surfaces can be removed by hand-sanding operations followed by buffing and polishing, if steps below are followed carefully.

a. Before attempting any scratch removal it is necessary to confirm the process and materials and tools being used with the Aeropro aircraft factory, the distributor, a qualified aviation technician, or a distributor of the acrylic material.

b. Wrap a piece of extremely fine sandpaper or abrasive cloth around a rubber pad or block of wood. Rub surface around scratch with a circular motion, keeping abrasive constantly wet with clean water to prevent scratching surface further. Use minimum pressure and cover an area large enough to prevent formation optical distortions.

Caution	Do not use a coarse grade of abrasive. No 400 is of maximum coarseness.

c. Continue sanding operation, using progressively finer grade abrasives until scratches disappear. Do not skip one grade of abrasive!

d. When scratches have been removed, wash area thoroughly with clean water to remove all gritty particles. The entire sanded area will be clouded with minute scratches which must be removed to restore transparency.

e. Apply first tallow or buffing compound to a motor-driven buffing wheel. Hold wheel against plastic surface, moving it constantly over damaged area until cloudy appearance disappears. A 2000-feet-per-minute surface speed is recommended to prevent overheating and distortion. (Example: 750 rpm polishing machine with a 10 inch buffing bonnet)

Note	Polishing can be accomplished by hand but will require a considerably longer period of time to attain the same result as produced by a buffing wheel.

f. When buffing is finished, wash area thoroughly and dry with a soft flannel cloth. Allow surface to cool and inspect area to determine if full transparency has been restored . Apply a thin coat of hard wax and polish surface lightly with a clean flannel cloth.

Note	Rubbing plastic surfaces with a dry cloth will build up an electrostatic charge which attracts dirt particles and may eventually cause scratching of surface, After wax has hardened, dissipate this charge by rubbing surface with a slightly damp chamois. This will also remove dust particles which have collected while wax is hardening.

g. Minute hairline scratches can often be removed by rubbing with commercial automobile body cleaner or fine-grade rubbing compound. Apply with a soft, clean, dry cloth or imitation chamois.

3.8 Cracks

a. When a crack appears, drill a hole at end of crack to prevent further spreading. The hole should be approximately 1/8 inch in diameter, depending on length of crack and thickness of material.

b. Temporary repairs to flat surfaces can be accomplished by placing a thin strip of wood over each side of surface and inserting small bolts through wood and plastic. A cushion of sheet rubber or aircraft fabric should be placed between wood and plastic on both sides.

c. A temporary repair can be made on a curved surface by placing fabric patches over affected areas. Secure patches with aircraft dope or laquer thinner.

Note	These type of repairs is used as a temporary measure **ONLY**, and as soon as facilities are available, panel should be replaced.

3.9 Replacement

3.10 Removal

3.10.1 Required Tools: Jig saw, crowbar, power drill, abrasive paper
3.10.2 Parts required: None
3.10.3 Level of Maintenance: **Heavy**
3.10.4 Certification required: **A&P Mechanic**

a. Cut out the old windshield window using a jig saw without causing damage to the instrument board panel, windshield plate and fuselage, remove old rivets on the upper and side plates. Remove the instrument board panel.

b. Remove the remaining border of the windshield by the use of an appropriate prybar and sand off old glue to get a smooth joining surface at the fuselage.

3.11 Installation

3.11.1 Required Tools: Jig saw, epoxy resin and hardener, abrasive paper (30 & 180 grain size), tape, Rivets 3.2 x 8 mm and 4.2 x 8 mm, lacquer and appropriate tools and equipment.
3.11.2 Parts required: windshield as required
3.11.3 Level of Maintenance: **Heavy**
3.11.4 Certification required: **A&P Mechanic**

a. Clip and fit the new windshield to the required size.

Caution	Use great care when cutting the windshield with a jig saw, the temperature of the window must be 65° F at least. Lower temperatures could more easily cause the material to crack or break when sawing.

b. When the new windscreen is correctly positioned, fit the upper plate and fix it to the fuselage using three 2 x 8 mm rivets, using silicone adhesive between the aluminium plate and window.

c. Then you rivet the aluminium plates and the M4x4 holding screws.

d. You glue transitionally the plate between the leading edge and window, and let the epoxy cure again for 24 hours at 65° F at least. Apply polyester putty, primer and lacquer to finish your work.

e. You glue the upper plate of board panel into place and let the epoxy cure again for 24 hours at 65° F at least.

f. Reinstall the complete instrument board panel.

3.12 Cabin Doors

The cockpit is accessed via a clear, polycarbonate door on either side of the aircraft. The doors are fitted to the airplane by hinges along its upper edge. The doors are supported when in the open position by a gas pressure spring. Both doors are lockable and have a glazed finish.

3.13 Removal and Installation

3.13.1 Required Tools: 8 & 10mm wench
3.13.2 Parts required: None
3.13.3 Level of Maintenance: **Light**
3.13.4 Certification required: **Owner**

To remove cabin doors (refer to figure 3-1) unlock and open the doors, detatch the support gas struts (3) from the door bracket (4). Withdraw safety pins from both rear hinges on the upper edge of the doors (2). Installation is carried out in reverse order.

Figure 3-1

1. Front Hinges
2. Rear Hinges Screw M5x15
3. Gas Struts
4. Upper holder of Gas Struts on the door frame
5. Down holder of Gas Strut on the Fuselage
6. Rear door handle of the door

3.15 Lock

3.16 Removal and Installation

3.16.1 Required Tools: 2.5 mm allen wrench, needle-nosed pliers, screwdriver.
3.16.2 Parts required: Door handle set, Loctite 243 (medium strength).
3.16.3 Level of Maintenance: **Light**
3.16.4 Certification required: **Owner**

Figure 3-2

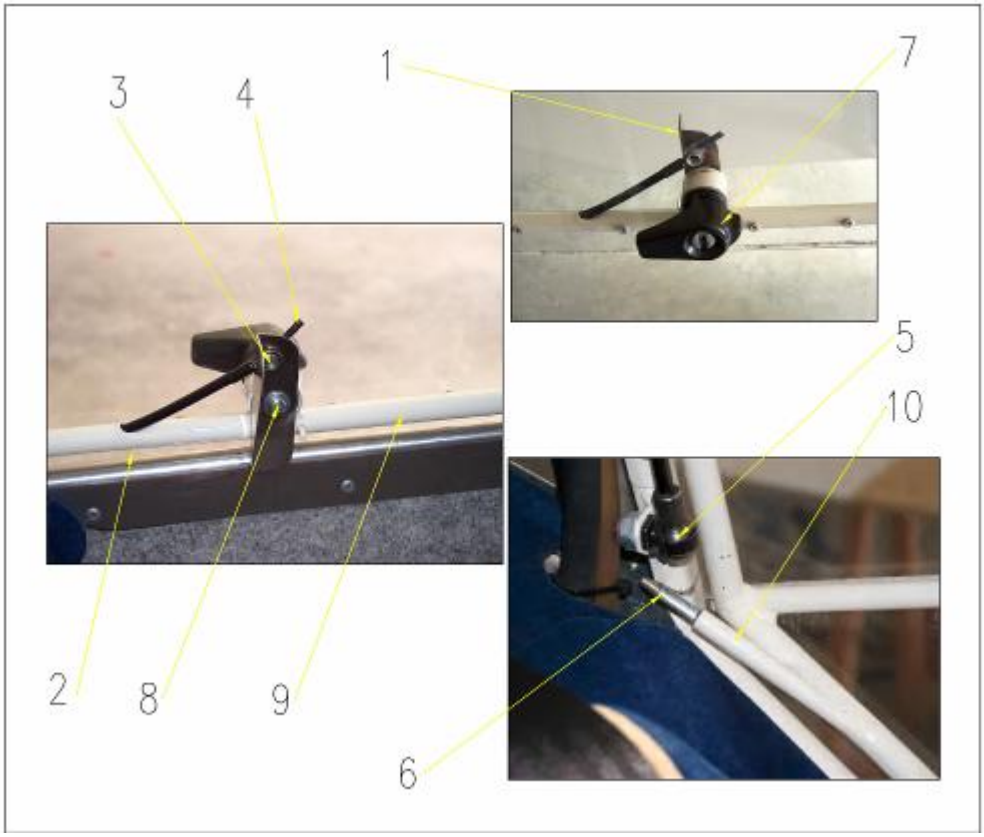

1. Inner pawl
2. Door frame
3. Bowden
4. Control cable for Pawl (pin)
5. Fuselage holder of Gas Strut
6. Rear Pawl
7. Main Lock of door
8. Screw for cable holding
9. Main screw of Lock
10. Tube for rear Pawl

For removal use the following steps. For installation reverse the sequence:

a. Remove screw (3) and take away rear pawl (6)
b. Remove screw (8) and take away inert pawl and from the oposite side take away the main door lock.
c. For instalation use optimal lubricating Vaseline and use LOCTITE 243 (medium strength) to secure the screw.

3.17 Seats

3.18 Description

The pilot and co-pilot seats are manufactured as a one-piece fiberglass component, attached to the fuselage at nine points. The seats are not adjustable.

3.19 Removal of Seats

3.19.1 Required Tools: screwdriver
3.19.2 Parts required: none
3.19.3 Level of Maintenance: **Light**
3.19.4 Certification required: **Owner**

Undo the seat belts. Carefully remove the fabric cushions from the composite seat frame. Unscrew and remove all 9 screws from the seat frame and remove seat.

3.20 Repair

If cracks are detected in any of the glass fiber seat shells, they may be repaired using L285 Epoxy Resin or similar (R&G L20), reinforced with suitable glass fiber fabrics. Follow the instructions on the container for a successful repair.

3.21 Upholstery

Due to the wide selection of fabrics, styles and colors, it is impossible to depict each particular type of upholstery. The following paragraphs describes general procedures which will serve as a guide in removal and replacement of upholstery. Major work, if possible, should be done by an experienced mechanic.

Materials and tools will vary with the particular job. Scissors for trimming upholstery to size and a dull-bladed putty knife are the only tools required for most trim work. Use industrial rubber cement to hold mats and fabric edges in place.

3.22 Baggage Compartment

The baggage compartment of 700 x 530 x 570 mm size is located behind the cockpit seats. It is accessible from between the seats and can hold baggage up to 65 lb. It is not possible to remove the baggage compartment as it is installed before being covered by the fabric.

3.23 Safety provisions

3.24 Ballistic Recovery System - optional equipment

3.25 Description

The A240/A220 may be equipped with an optional BRS parachute rescue system. The BRS installation manual is available and provided separately.

3.26 Installation

3.26.1 Required tools: Power drill, 6.5 mm drill, phillips head screwdriver, edge cutter, 4 & 5 mm allen wrench, 8 mm wrench.
3.26.2 Parts required: Bracket for rocket motor incl. screw kit, 50” of 6 mm nylon rope, Loctite 243/242 (medium strength), cable ties, socket screw (M6 x 25 mm) + washer and retainer.
3.26.3 Level of maintenance: **Heavy**
3.26.4 Certification required: **Aeropro CZ factory-authorized LSRM-A or A&P Mechanic**

Figure 3-3

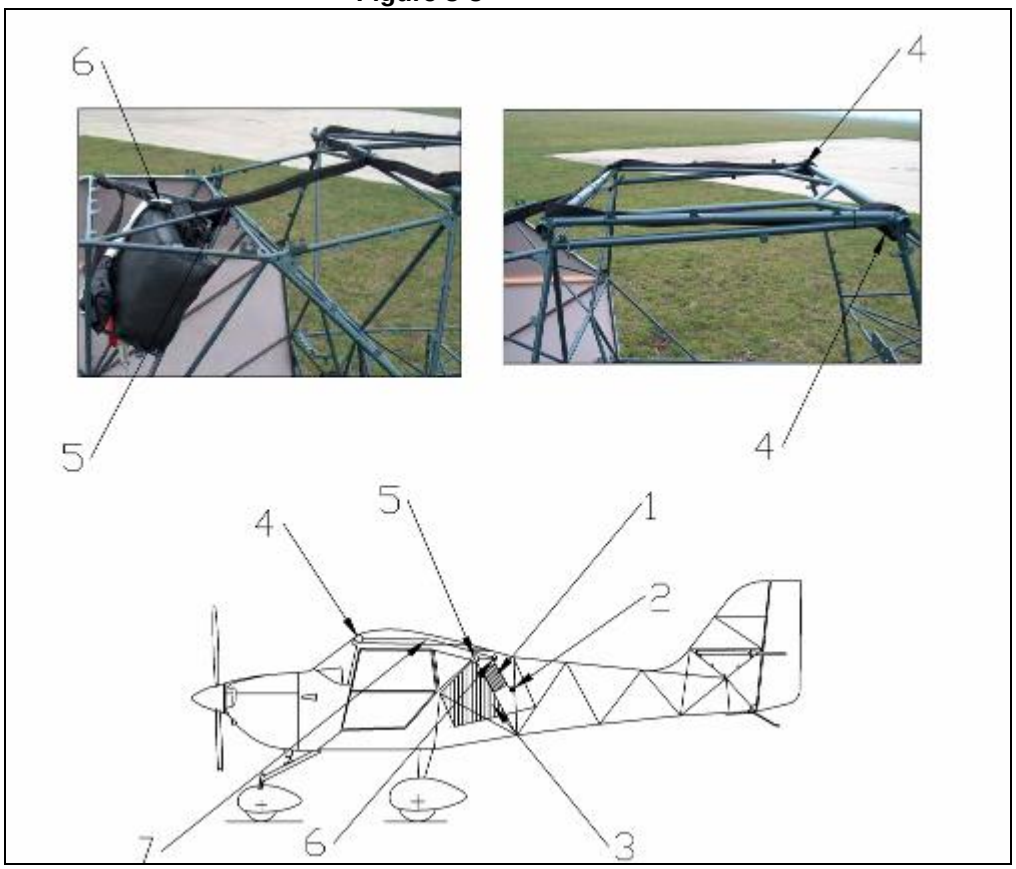

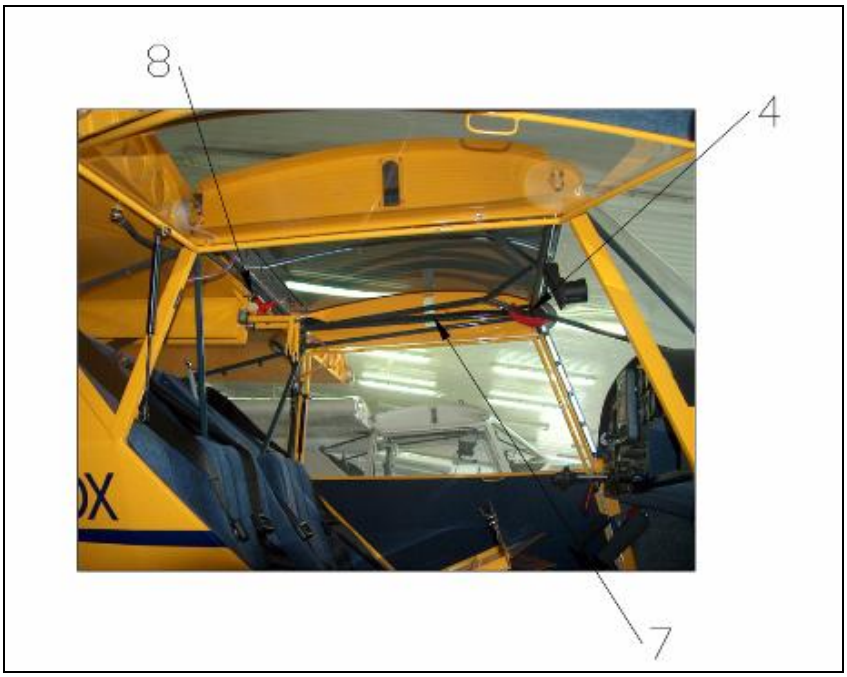

1. Parachute rescue system
2. Rocket motor
3. Baggage compartment
4. Front two points for installation front belts
5. Rear one point for installation rear belt
6. Clips for connection of belts
7. Belts
8. Holder for activation rocket motor

If the aircraft is to be equipped with the BRS system, follow the instructions in the rescue system installation manual. A special mounting kit, containing the bracket for the rocket motor and some miscellaneous parts can be obtained from the Aeropro CZ USA distributor. Figure 3-3. illustrates the installation of the rescue system in the aircraft.

Warning	When working on the ballistic parachute system, ensure that the securing pin is installed to the system and always take great care. An unintended launch of the rocket motor could cause serious injury or death.

3.27 Safety belts

The seats are of a side-by-side arrangement, situated in the fuselage centre section. They consist of an upholstered fiberglass skeleton. Each pilot's seat is equipped with four-point safety belts anchored in the fuselage lattice-work.

3.28 Mapbox – storage space for charts, etc.

A small storage area is located on the lower right hand side of the board panel. This is ideal for the storage of such items as charts and other navigational equipment up to a maximum weight of 5 lb.

Section 4 -- Structures – Wings and Empennage

Table of contents **Page**

4.1 Wings

4.2 Description

The rectangular-plan wing is of a metal frame structure. It is composed of two duralumin carrying tubes and a system of duralumin ribs and diagonal stiffeners. The duralumin rib system comprises of 14 full ribs and 13 false ribs, stiffening the skin in the leading-edge area of assembly. The horizontal plane section of the wing is strengthened with a system of steel diagonal tubular stiffeners. There is a 40 liter fuel tank built in the wing root section which is welded of aluminium alloy metal sheets. Correct shape of the wing leading edge is guaranteed due to a fiberglass die-formed shell glued on the leading edge tube. The trailing edge is formed of a duralumin shaped piece. The wing is fabric-covered.

Below the wing trailing edge are the flaperons incorporating both function of ailerons and wing flaps; they are attached to the rib ends by means of five hinges. The flaperon structure consists of a duralumin load-carrying tube swinging in the hinges and a fiberglass sandwich part, itself an inversely moulded airfoil.

The wings are attached to the fuselage by suspension points of load-carrying tubes in the upper section of the wing and are anchored by “V” struts to the bottom fuselage edge. The system of attachment uses an axle common for the wing rear suspension and the strut makes it possible to swing the wings simply backward lengthwise the fuselage, thus reducing demands on storage space and road transport.

Figure 4-1

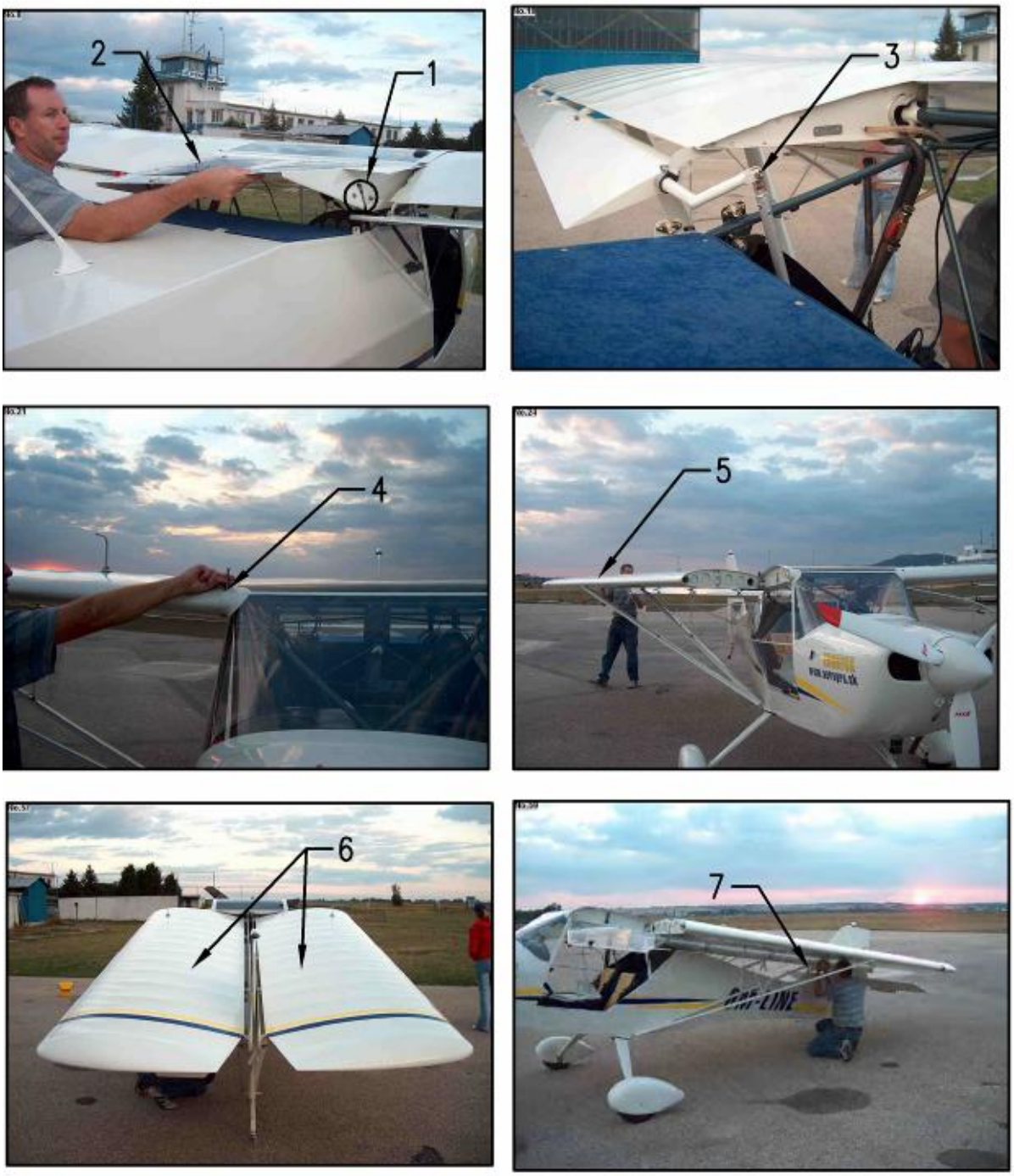

4.3 Retract wings for transport (according to figure 4-1)

4.3.1 Required Tools: Screwdriver, 8, 9, 12 mm wrench
4.3.2 Parts required: None
4.3.3 Level of Maintenance: **Light**
4.3.4 Certification required: **Owner**

To transport the aircraft, it is necessary to fold the wings to the transport position, i.e. to disconnect the wing front suspensions, to fold wings and fix them to the fuselage in transport position secured with connecting rods (pos. **7**).

To prepare the aircraft for transport:

a. Unlock and remove the rear cockpit cover, put it aside on the seat (pos.**1,2**)
b. Shut the wing tank fuel valves – after assuring the fuel tanks have ½ or lower fuel levels.
c. Discouple the flaperon tie rods on both wings (pos.**3**).
d. Unlock the front clamping bolt connecting the wing to the fuselage.
e. Move the wing slightly to relieve the front clamping bolt and pull it out. Holding the wing by one hand, fold it carefully backwards while simultaneously checking the movement of the flaperon using the other hand to prevent it from striking on fuselage while being folded into the transport position.
f. Repeat points d. and e. for the second wing (pos.**4**).
g. Fix wings to fuselage by means of connecting rods (pos.**7**).
h. Aircraft unfolding is to be carried out in reverse sequence

4.4 Removal

4.4.1 Required Tools: 10/12/13/14 mm wrench, screwdriver and phillips head screwdriver, needle-nosed pliers.
4.4.2 Parts required: None
4.4.3 Level of Maintenance: **Heavy**
4.4.4 Certification required: **A&P Mechanic or LSA Repairman Maintenance**

Wing removal is most easily accomplished if three people are available to handle the wing. Otherwise, the wing should be supported with a sling when the fastenings are loosened. When using a sling, great care has to be taken not to damage the wing´s surface. If too much pressure is applied to the surface due to unsuitable slings, dents or other damage may result. Details of the strut connections are given in figure 4-2. and figure 4-3.

a. drain fuel from wing tanks (2)
b. disconnect the pitot line at the fuselage (only on left wing) (1)
c. disconnect navigation light terminal at wing root
d. disconnect the fuel pipe (2)
e. disconnect the flaperon connection inside the cabin
f. remove the support strut from the wing and main strut (5)
g. support the wing at the outboard end and disconnect the strut at the fuselage
h. disconnect the strut at the wing connection and remove
i. remove and withdraw main wing attachment bolt
j. separate the wing from the fuselage as much as possible, it may be required to lower the wing outboard end for a small amount (1-2 inches)
k. rotate the wing 90° so that the leading edge is pointing downwards while moving the outboard end backwards till the wing is aligned with the fuselage tail. support wing at the root
l. remove wing and lay on padded stand

Figure 4-3

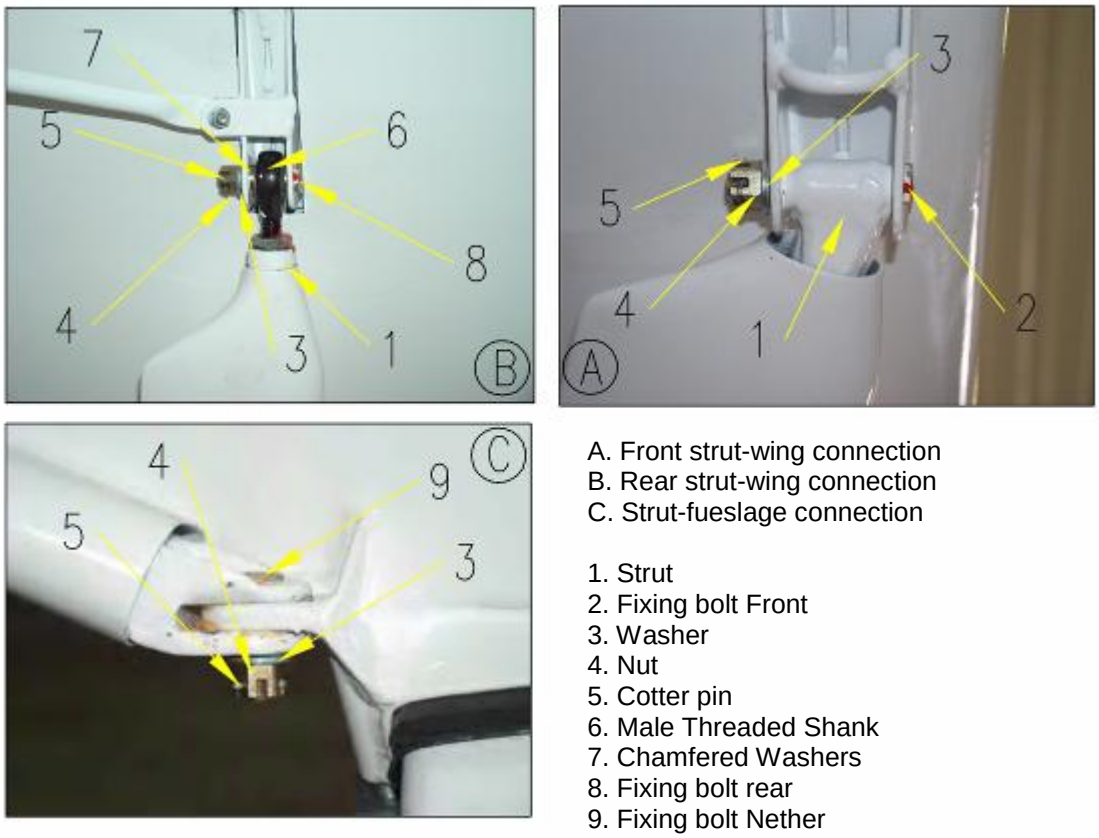

A. Front strut-wing connection
B. Rear strut-wing connection
C. Strut-fueslage connection

1. Strut
2. Fixing bolt Front
3. Washer
4. Nut
5. Cotter pin
6. Male Threaded Shank
7. Chamfered Washers
8. Fixing bolt rear
9. Fixing bolt Nether

4.5 Repair

A damaged wing may be repaired in accordance with instructions outlined in Section 18. If main spar is damaged or alignment of the wing panel is of concern, we recommend to replace the whole wing or return it for repair to the factory. Damaged fabric cover may be repaired following the instructions given by the fabric manufacturer (Polyfiber USA).

4.6 Installation

4.6.1 Required Tools:	Similar to removal.
4.6.2 Parts required:	By the use of material
4.6.3 Level of Maintenance:	**Heavy**
4.6.4 Certification required:	**A&P Mechanic or LSA Repairman Maintenance**

The wing installation in general has to be carried out in reverse order to removal but we strongly recommend to read the following instructions prior to starting the installation:

4.7 Installing strut to wing

Connect main strut first to the wing and support as suitable, so that no damage occurs to the attachment and strut bearing. In figure 4-3. the correct installation of the strut-wing connection is given. Take care that the leading edge of the profiled main strut is pointing forward. It may be helpful to apply a small amount of grease to both champfered washers prior to the installation. Take care to ensure correct orientation of the washers, otherwise the folding mechanism of the wings will not operate properly and this may cause damage to the strut.

Caution	Watch for the correct installation of the chamfered washers as shown in figure 4-3. Damage to the struts may occur and folding of the wings will not be possible if those washers are installed in a wrong way! Tighten fixing bolt to max. torque of 24 Nm / 212 inlb.

4.8 Installing wing to fuselage

a. for this operation 3 people are required
b. one worker is required to hold the wing on the leading edge and steady the flaperon. The second worker is required to support the wing and flaperon at their roots. The third worker is needed to attach the wing strut.
c. Bolt the wing to the fuselage as shown in figure 4-3 (C)
d. After the wing is installed, attach the main strut, ensuring correct direction, then install the support struts as shown in figures 4-2 and 4-3.
e. Finally reconnect all fuel hoses and wiring for position and strobe lighting.

Caution	**DO NOT REUSE SELF-LOCKING NUTS!**

4.9 Wing struts

4.10 Description

The wings are attached to the fuselage by suspension points of load-carrying tubes in the upper section of the wing and are anchored by „V“ struts to the bottom fuselage edge. The system of attachment uses an axle common for the wing rear suspension and the strut enables it to swing the wings simply backward lengthwise along the fuselage, thus reducing demands on storage space and road transport.

4.11 Removal and installation

(Refer to paragraph 4.4 and 4.6)

Warning	Wing strut repair is not permitted, if any damage to the strut is detected, the complete strut assembly has to be replaced.

4.12 Tail unit

4.13 Description

The tail unit is of the conventional arrangement with its load-bearing frame welded using steel tubes. A fabric-covered rudder is fixed to the tail by three hinges. The rudder control cables are connected to the bottom of the Rudder. The horizontal stabilizer is supported on both sides by struts attached to the lower / rear fuselage section. The elevator with its one piece leading edge (singular tube) is attached by five suspension points in total, with the drive located in the middle. All the rudder, stabilizer and elevator surfaces are fabric-covered.

4.14 Removal and installation

4.14.1 Required Tools: Similar to removal.
4.14.2 Parts required: By the use material
4.14.3 Level of Maintenance: **Heavy**
4.14.4 Certification required: **A&P Mechanic or LSA Repairman Maintenance**

Figure 4-4

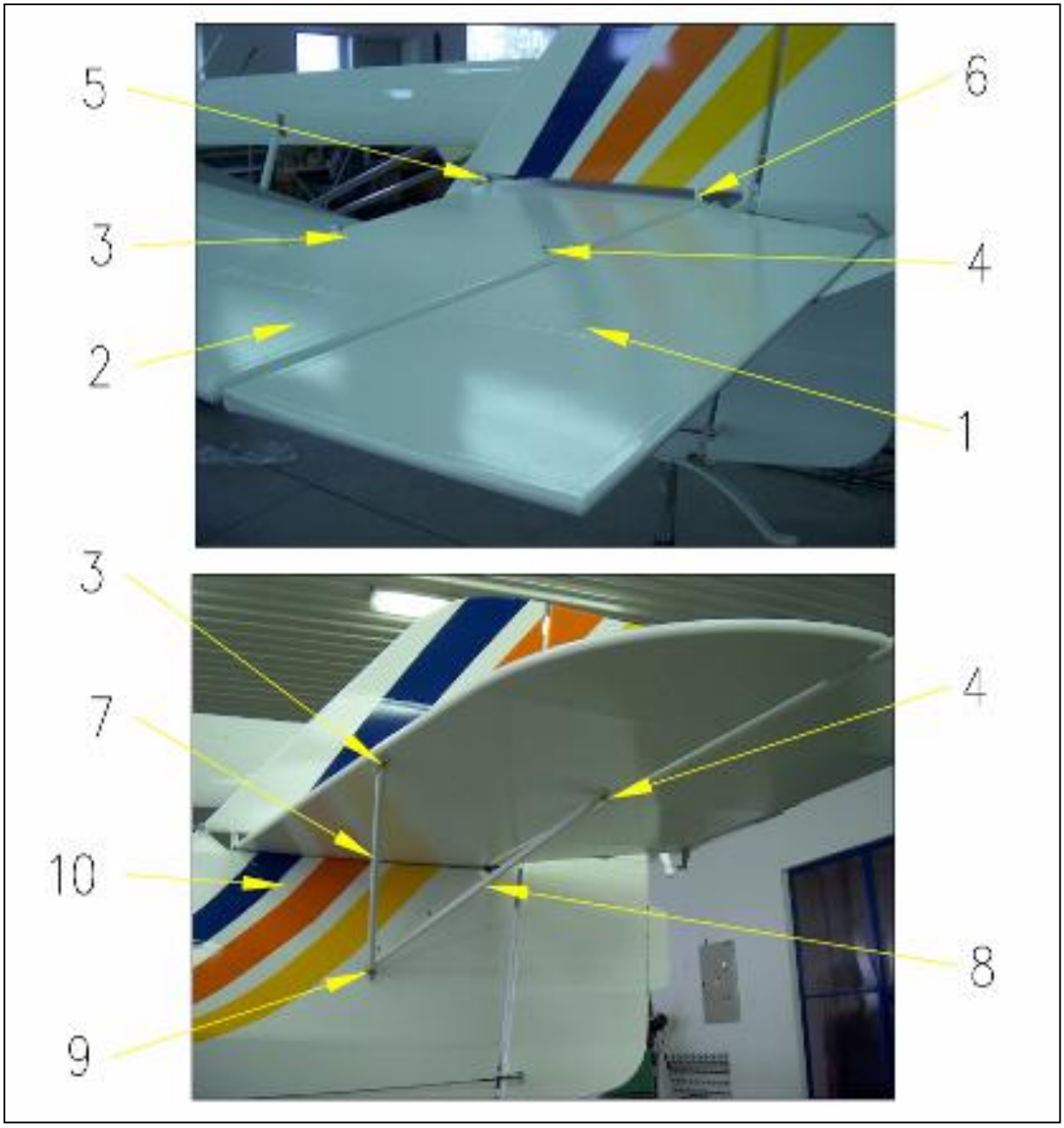

1. elevator
2. stabilizer
3. fixing bolt between front strut and stabilizer
4. fixing bolt between rear strut and stabilizer
5. front holder
6. rear holder
7. front stabilizer strut
8. rear stabilizer strut
9. fuselage holder for struts
10. covering plate under stabilizer

Figure 4-5

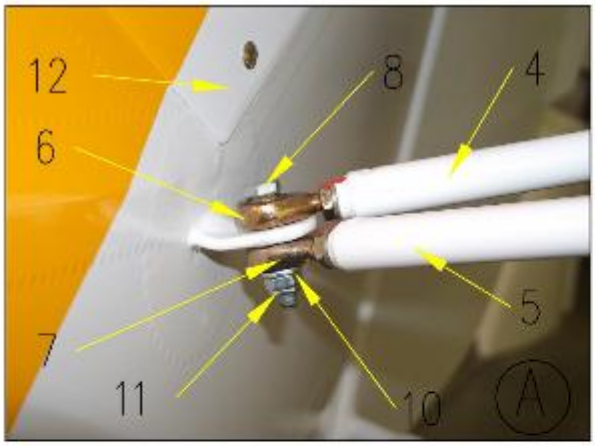

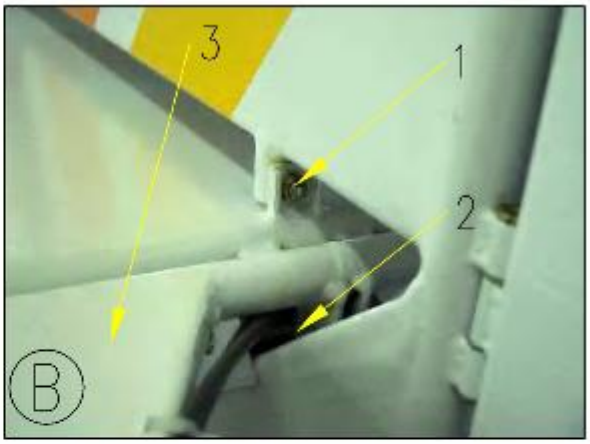

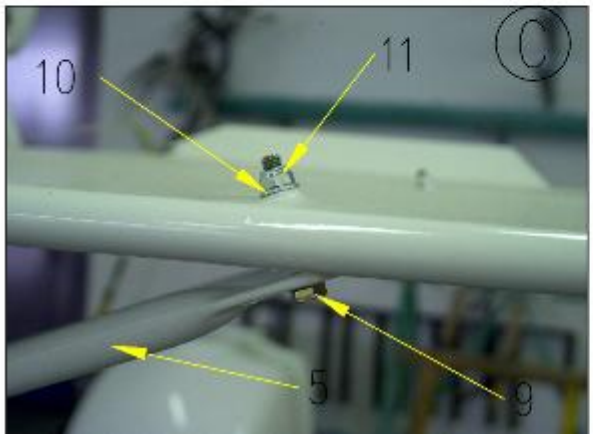

A. fuselage holder for struts
B. rear holder
C. fixing bolt between front strut and stabilizer

1. screw for fuselage and stabilizer
2. lever for elevator control
3. elevator
4. rear strut
5. front strut
6. male threaded shank for rear strut
7. male threaded shank for front strut
8. screw for fuselage and strut
9. screw for stabilizer and strut
10. washer
11. self-locking nut

a. remove the plate covering on the fuselage under the stabilizer. disconnect route of the elevator trim. see figure 4-4 N.10
b. disconnect the five hinges between stabilizer and elevator.
c. Unscrew and remove all struts and holders shown in figure 4-4 N.3, 4, 5, 6, 9
d. Disconnect and remove the elevator control rod.
e. Remove elevator from fuselage
f. For re-installation repeat the above in the reverse order

Caution	**DO NOT REUSE SELF-LOCKING NUTS!**

Figure 4-2

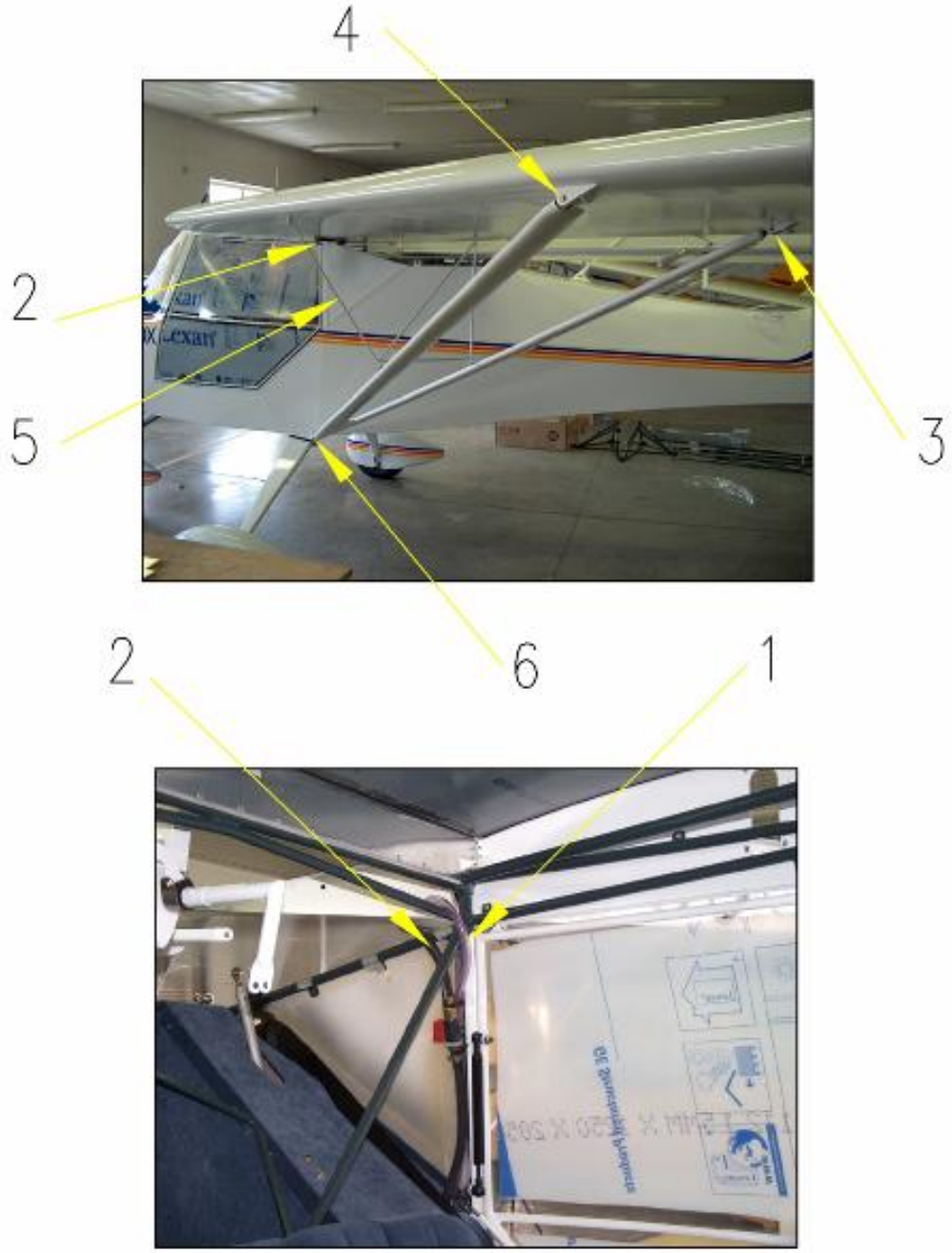

1. pitot line at fuselage
2. fuel line
3. rear strut-wing connection
4. front strut-wing connection
5. support strut
6. strut-fuselage connection

Section 5

Structures – A240 Landing Gear and Brakes *(see separate section for A220 taildragger)*

Table of Contents **Page**

5.1 Landing Gear

5.2 General Description

The A240 has a tricycle undercarriage with a steerable nose wheel. The main landing gear is formed of lever-type swinging legs of composite material, with wheels standard with 15x6.00x6 tires, and provided with hydraulic disc brakes operated from control lever located on the instrument panel. The nose-wheel landing gear is constructed by welded steel tubes. The standard nose wheel is equipped with a 12x4 size tire. Larger tires and a larger front wheel are options.

5.3 Trouble Shooting

Trouble	Probable Cause	Remedy
Aircraft leans to one side	Incorrect tire inflation	Inflate to pressure specified in figure 1-1.
Tires wears excessively	Incorrect tire inflation	Inflate to pressure specified in figure 1-1.
	Dragging brakes	Refer to paragraph 5.28.
	Wheel bearing damaged	Install new part (s)
	Wheels out of balance	Correct in accordance with paragraph 5.22.
Wheel bounce evident on smooth surface	Out of balance condition	Correct in accordance with paragraph 5.22.

5.4 Main Gear

Figure 5-1. illustrates the main landing gear. The illustrations should be used in conjunction with the following procedures during removal and installation of component parts. Disassembly, inspection and repair, and reassembly of the main undercarrage configurations are described in separate paragraphs for each configuration. The webbed wheels having two aluminum flanges and a hub that are manufactured by an Aeropro supplier. The flanges are attached to the wheel hub by thru-bolts and nuts as shown in figure 5-2. During assembly of the main wheel the thru-bold nuts or capscrews, as applicable, shall be tightened evenly and torqued to the value specified in figure 5-2.

Figure 5-1

1. main undercarrage legs
2. main wheel assembly
3. wheel fairing
4. brake
5. main holder
6. screw for main holder 2xM8
7. rubber template
8. safety wire
9. bolt for holder on fuselage
10. washer
11. nut
12. cotter pin

5.5 Removal and Installation

5.5.1 Required Tools: 10/11/17 mm wrench, phillips screwdriver, wire cutting pliers, bleed kit
5.5.2 Parts required: 2 x cotter pin (2 x 25 mm).
5.5.3 Level of Maintenance: **Heavy**
5.5.4 Certification required: **A&P Mechanic or LSA Repairman Maintenance**

The following procedural steps remove the landing gear as a complete assembly. Refer to applicable paragraphs for removal of the individual components. You continue according to Figure 5-1

1. lift aeroplane and remove seat
2. remove the wheel pants
3. remove cable ties securing the brake line distributor to the fuselage (accessible when baggage compartment is removed).
4. drain hydraulic brake fluid from brake lines.
5. disconnect hydraulic brake line at the brake line distributor.
6. hoist or jack aircraft in accordance with figure 5-1

7. remove both bolts attaching main gear to fuselage.
8. remove main gear assembly.

Installation of the main gear has to be carried out in reversed order to removal.

5.6 Repair of fuselage and wheel fairings

5.6.1 Required Tools: as required
5.6.2 Parts required: epoxy resin, glass fiber tape, rovings, fabrics.
5.6.3 Level of Maintenance: **Heavy**
5.6.4 Certification required: **A&P Mechanic or LSA Repairman Maintenance**

Repair of main gear is limited to the repair of the wheel fairings. If cracks are dedected in the glass fiber fairings, they may be repaired using L285 Epoxy Resin or similar (R&G L20), reinforcing with suitable carbon fiber fabrics. Follow the instructions on the container for a successful completion of the repair. If cracks in the undercarrage legs are present, the main gear has to be replaced, except if cracks are only related to the paint finish. If in doubt, always replace the main gear.

5.7 Main Wheel Removal

5.7.1 Required Tools: 27mm socket (for axle nut), 13mm wrench, etc.
5.7.2 Parts required: None
5.7.3 Level of Maintenance: **Line**
5.7.4 Certification required: **A&P Mechanic, LSA Repairman Maintenance or Owner**

To remove main wheel follow steps 1 and 3, outlined in paragraph 5.5 and then proceed as described below (refer to figure 5-2.):

Figure 5-2

1, 2, 3 -- 8mm bolts holding brake rotor onto inner wheel half
4. axle flange nut on the main wheel axle
5. 6x screw M6 (with 6x 6mm washers and 6mm nylock nuts)

6. inner wheel half includes wheel hub
7. outer wheel half

a. remove wheel pant
b. loosen the axle flange nut (un-peen the axle nut flange as necessary)
c. remove the three 8mm bolts holding brake rotor to the inside wheel half
d. jack-up/lift the tire/wheel off the ground - secure for safety
e. remove axle nut and slide wheel off the axle

Note	If tire, brake pads or brake disc have to be replaced, it is not necessary to drain and disconnect the brake line.

5.8 Main wheel disassembly

5.8.1 Required Tools: 2 x 10mm wrenches or 2 ratchets with 10mm sockets
5.8.2 Parts required: None
5.8.3 Level of Maintenance: **Light**
5.8.4 Certification required: **A&P or LSA Repairman Maintenance**

a. Remove valve core and deflate tire. Break tire beads loose from wheel rims.

Warning	Injury can result from attempting to separate wheel halves with the tire inflated. Avoid damaging wheel flanges when breaking tire beads loose. A scratch, gouge, or nick may cause wheel failure.

b. Remove the six 6mm thru-bolts and separate wheel halves, and remove tire and inner tube
c. Check wheel bearings and remove and replace if any wear or roughness is found

5.9 Main wheel inspection and repair

5.9.1 Required Tools: Depending on condition
5.9.2 Parts required: Depending on condition
5.9.3 Level of Maintenance: **Light**
5.9.4 Certification required: **A&P Mechanic or LSA Repairman Maintenance**

a. Clean all metal parts in solvent and dry thoroughly.
b. Inspect wheel halves for cracks. Cracked wheel halves shall be discarded and new parts used. Sand out nicks, gouges, and corroded areas. When the protective coating has been removed, the area should be cleaned thoroughly, primed with zinc chromate and painted with aluminum lacquer.
c. If excessively warped or scored, or worn to a thickness of 0.160-inch, brake disc should be replaced with a new part. Sand smooth small nicks and scratches.
d. Carefully inspect bearings for damage and discoloration or noises when rotating.

Note	Do not try to re-lubricate the sealed bearings. If in doubt about bearing condition, replace bearings.

5.10 Main Wheel Reassembly

5.10.1 Required Tools: 2x 10 mm wrench or 2x ratchets with 10mm sockets
5.10.2 Parts required: 6 x self-locking nut (M6)
5.10.3 Level of Maintenance: **Light**
5.10.4 Certification required: **A&P or LSA Repairman Maintenance**

a. If replacing wheel bearings, install in normal wheel bearing replacement procedure
b. Position tire and tube on wheel halves with the inner tube valve stem through the hole in the outer wheel half.
c. Insert thru-bolts through the wheel halves - bolt head inside, nylock nuts facing outside
d. Assemble the washers and nylock nuts on the thru-bolts and torque to 88 in. lb. (10 Nm).

Caution	Uneven or improper torque of thru-bolt nuts can cause failure of bolts, with resultant wheel failure.

Caution	Do not use aircraft hydraulic fluid, doing so will cause damage to the cylinder seals. Yellow automobile brake fluid must be used only.

5.11 Nose Gear (see Figure 5-3)

5.12 Removal and Installation

5.12.1 Required Tools: screwdriver, 8/10/17 mm wrenches
5.12.2 Parts required: self-locking nut (M6), 2 x self-locking nut (M5), and safety-wire
5.12.3 Level of Maintenance: **Heavy**
5.12.4 Certification required: **A&P Mechanic or LSA Repairman Maintenance**

a. Remove engine cowling for access.
b. Weight or tie-down tail of aircraft to raise nose wheel off the floor.
c. Remove control bowden cable from nosewheel fork
d. To be disconnected the control Bowden cables from the front steering fork and pull them out of the grips on the lower part of the undercarriage leg.
e. The front wheel to be under laid so that it is freely suspended on the washer and the cable stop is to be loosened
f. to locate an absorber of the front leg through the binding cable so that it does not throw out and the bottom absorber pin on the front leg to be disconnected
g. Disconnect the absorber stop from undercarriage leg.
h. Unscrew the 4 x screws that hold the bearings on the front undercarriage leg.

5.13 Repair

If damage to any of the nose gear parts is detected then replace the affected parts, no part of the nose gear assembly can be repaired.

5.14 Nose Wheel Removal and Installation

5.15 Disassembly

5.15.1 Required Tools: 13mm socket, 6mm Allen wrench, 10mm wrench
5.15.2 Parts required: None
5.15.3 Level of Maintenance: **Light**
5.15.4 Certification required: **A&P or LSA Repairman Maintenance or Owner**

a. Remove nose wheel axle from wheel fairing then withdraw wheel from fairing.

Note	Remember position of spacers for reassembly.

b. Remove valve cover and deflate tire. Break tire beads loose from wheel rims. Injury can result from attempting to separate wheel halves with the tire inflated. Avoid damaging wheel flanges when breaking tire beads loose. Any scratches, gouges, or nicks may cause wheel failure.

c. Remove thru-bolts and separate wheel halves, removing tire, tube and hub.

5.16 Inspection and Repair

5.16.1 Required Tools:	Depending on condition
5.16.2 Parts required:	Depending on condition
5.16.3 Level of Maintenance:	**Light**
5.16.4 Certification required:	**A&P Mechanic or LSA Repairman Maintenance**

a. Clean all metal parts in solvent and dry thoroughly.
b. Inspect wheel halves for cracks. Cracked wheel halves shall be discarded and new parts used. Sand out nicks, gouges, and corroded areas. When the protective coating has been removed, the area should be cleaned thoroughly, primed with zinc chromate and painted with aluminum lacquer.
c. Carefully inspect bearings for damage and discoloration or noises when rotating. Do not try to re-lubricate the sealed bearings. If in doubt about bearing condition, replace bearings.

Figure 5-3

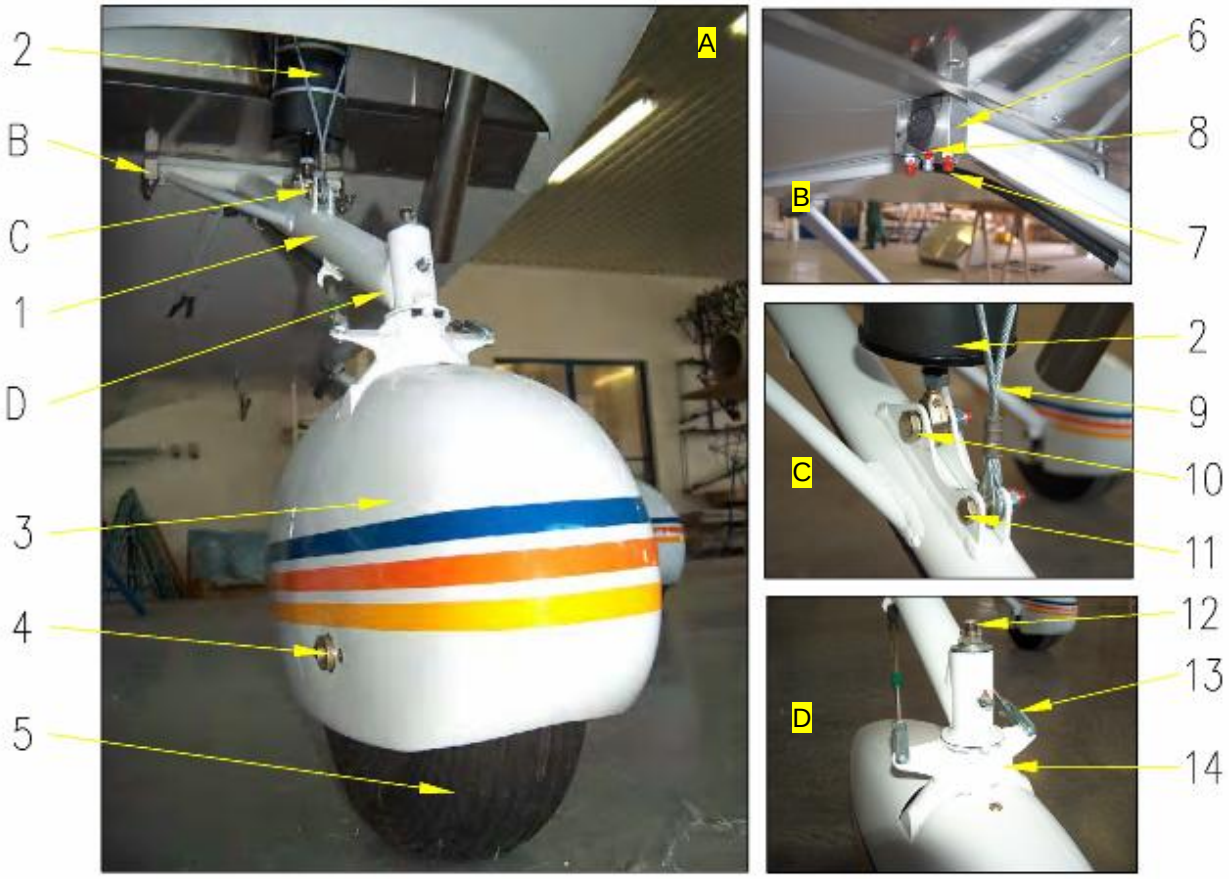

A. nose gear assembly
B. assembly main bearing for holder of nose gear
C. holder for shock absorber and stop of nose leg
D. control lever of nose leg
1. nose leg
2. shock absorber
3. wheel fairing

4. axis nose wheel
5. nose wheel
6. holder for bearing
7. screws 4 x M6 necessary for two sides
8. lubrication cup
9. absorber stop cable
10. pin for shock absorber
11. pin for absorber stop
12. axle fork nose leg
13. control of nose leg
14. fork nose leg

5.17 Reassembly

5.17.1 Required Tools: 10mm wrench.
5.17.2 Parts required: Loctite 243 (medium strength), 5 x self-locking nuts (M6)
5.17.3 Level of Maintenance: **Light**
5.17.4 Certification required: **A&P Mechanic or LSA Repairman Maintenance**

a. Insert thru-bolts through wheel half.
b. Position tire and tube on second wheel half with the tube inflation valve through hole in wheel half.
c. Place one wheel half in position on other wheel half. Apply a light force to bring wheel halves together.
d. While maintaining the light force assemble a washer and nut on one thru-bolt and tighten snugly.
e. Assemble the remaining washers and nuts on the thru-bolts and torque to 88 in. lb. (10 Nm). Use Loctite 243 to secure nuts.
f. Press one wheel bearing into wheel hub, ensure to place spacer into the wheel hub before installing the second bearing to the hub.

Caution	Uneven or improper torque of thru-bolt nuts can cause failure of bolts, with resultant wheel failure.

5.18 Wheel balancing

Since uneven tire wear is usually the cause of wheel unbalance, replacing the tire probably will correct this condition. Tire and tube manufacturing tolerances permit a specified amount of static unbalance. If a wheel shows evidence of unbalance during service, it may be statically balanced.

5.19 Nose wheel steering system

Nose wheel steering is accomplished through the bowden cables which are connected to the rudder pedals. Steering rod assemblies connect the nose gear steering.

5.20 Steering adjustment

Since the nose wheel steering and rudder system are interconnected, adjustment to one system may affect the other system. Section 10 of this manual contains rigging instructions for the rudder system as well as the nose wheel steering system.

5.21 Brake system

5.22 General description

The hydraulic brake system consists of a master cylinder including a reservoir, located on the board panel. A brake hose connects the master cylinder to a distributor, located behind the cabin bulkhead. Two brake hoses run from the master distributor to each wheel brake cylinder.

5.23 Trouble shooting

Trouble	Probable Cause	Remedy
Dragging Brakes	Brake lever binding.	Check and adjust properly.
	Worn or broken pistion return spring (in master cylinder).	Install a new cylinder.
	Restrictions in hydraulic lines or restriction in master cylinder valve.	Drain brake lines and clean inside of the brake line with filtered compressed air.
	Worn, scored or warped brake disc.	Install new disc and brake linings.
	Damaged or accumulated dirt restricting free movement of wheel brake parts.	Clean and repair or install new parts as necessary.
Brakes Fail to Operate	Leak in system.	Install new parts.
	Air in system.	Bleed system.
	Lack of fluid in master cylinder.	Fill and bleed system.
	Master cylinder defective.	Install a new cylinder.

5.24 Brake master cylinder (refer to figure 5-4.)

The brake master cylinder, located on the board panel, is activated by gently pulling on the brake lever postioned on the Instrument panel. A small reservoir is incorporated onto the master cylinder for the fluid supply.

Figure 5-4

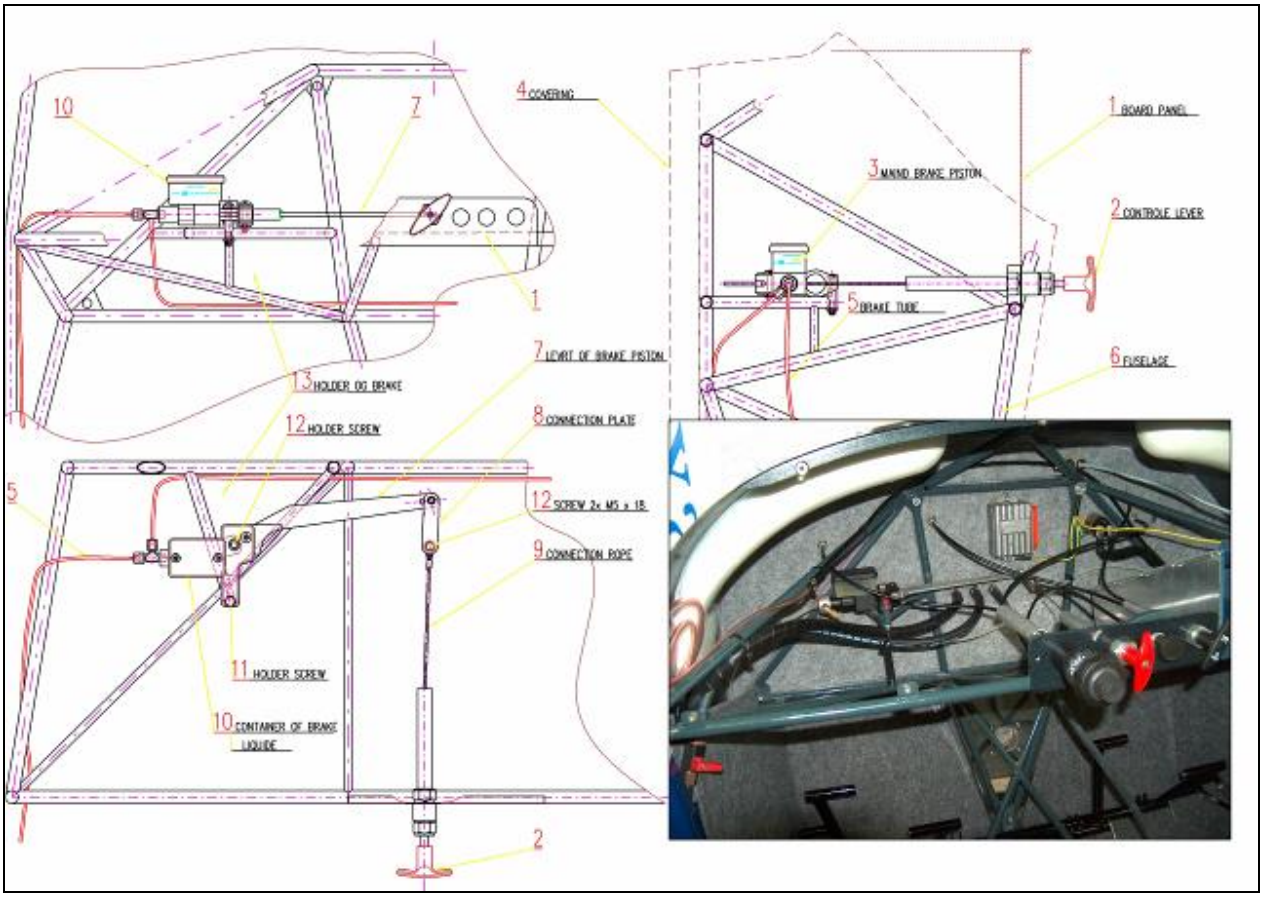

5.25 Removal and installation

5.25.1 Required Tools: Head screwdriver, 10 & 13 mm wrench
5.25.2 Parts required: Bleed kit
5.25.3 Level of Maintenance: **Light**
5.25.4 Certification required: **A&P Mechanic or LSA Repairman Maintenance**

a. Remove the front sheet of the instrument panel
b. Disconnect the cable for controlling the lever of the main brake cylinder see. 9
c. Drain the brake fluid and disconnect the distributing tubes see. 5
d. Unscrew the screws for gripping the casing of the brake cylinder.

5.26 Repair

The master cylinder is limited to cleaning, always install a new master cylinder if any defects are detected. Use DOT 4 brake fluid.

Caution	Do **NOT** use aircraft hydraulic fluid because this will damage the master cylinder sealings. Use only DOT 4 brake fluid.

5.27 Hydraulic brake hoses

All hydraulic hoses used for the brake system are flexible plastic hoses. All hoses provide appropriate connectors to provide an easy replacement.

5.28 Wheel brake caliper assemblies

The wheel brake assemblies use a rotor-disc which is attached to the main wheel fixed by the three 8mm thru-bolts and a floating brake assembly.

5.29 Removal

To remove brake system from the wheel, refer to figure 5-2 and paragraphs 5.7 and 5.8 when the aircraft is equipped with Aeropro brakes. Drain hydraulic fluid from brake hoses prior to disconnecting the brake assembly.

After the brake assembly is disconnected you can remove disc and brake linings from the assembly.

5.30 Inspection and repair

5.30.1 Required Tools:	Depending on condition
5.30.2 Parts required:	Depending on condition
5.30.3 Level of Maintenance:	**Light**
5.30.4 Certification required:	**A&P Mechanic or LSA Repairman Maintenance**

a. Clean all parts except the brake linings and O-rings with an appropriate solvent and dry thoroughly.

Note	Thorough cleaning is important. Dirt and chips are the most common cause of malfunctions in the hydraulic brake system.

b. Check brake pads for deterioration and maximum permissible wear. See paragraph 5.37.

c. Inspect brake cylinder bore for scoring or corrosion. A scored or pitted cylinder will leak or cause rapid brake fluid seal. Install new brake cylinder (replace caliper) if scoring or corrosion is found.

d. If the anchor bolts on the brake assembly are nicked or gouged, they should be sanded smooth or replaced to prevent binding with the pressure plate or torque plate.

e. Inspect wheel brake disc for a minimum thickness of 0.118-inch. If brake disc is below minimum thickness, replace the disc.

5.31 Reassembly

Lubricate parts with clean yellow automobile brake fluid and assemble components with clean automobile yellow car brake fluid and assemble components with care to prevent damage to O-rings.

5.32 Installation

Installation of wheel brake assembly is done in reversed order to removal, refer to paragraph 5.33.

5.33 Check brake lining wear

New brake pads should be installed when the brake pad is worn to a minimum thickness of 0.118" (approx. thickness of a penny coin). New brake pads are approx. thickness of two penny coins.

5.34 Brake lining installation

5.34.1 Required Tools: None
5.34.2 Parts required: Brake pads, Copper Grease
5.34.3 Level of Maintenance: **Light**
5.34.4 Certification required: **A&P or LSA Repairman Maintenance or Owner**

a. Pull out back plate.
b. Apply copper grease to back plate and piston, replace brake linings.

5.35 Brake system bleeding

5.35.1 Required Tools: 11 mm wrench, bleed kit, 5mm bleeder screw, etc.
5.35.2 Parts required: DOT 4 car brake fluid
5.35.3 Level of Maintenance: **Light**
5.35.4 Certification required: **A&P or LSA Repairman Maintenance**

Bleeding with a clean hydraulic pressure source connected to the wheel cylinder bleeder is recommended. More details on our web page at... http://www.aerotrek.aero/brake-bleeding-tips.htm Further information about servicing brake calipers is on an Aeropro photo-series on our web page at... http://www.aerotrek.aero/photos/brakes/service-brake-caliper.pdf

a. Remove brake master cylinder filler plug and screw flexible hose with appropriate fitting into the filler hole at top of the master cylinder.

b. Immerse the free end of the flexible hose in a container with enough hydraulic fluid to cover the end of the hose.

c. Connect a clean hydraulic pressure source, such as a hydraulic hand pump or Hydro Fill unit, to the bleeder valve in the wheel cylinder.

d. As fluid is pumped into the system, observe the immersed end of the hose at the master brake cylinder for evidence of air bubbles being forced from the brake system. When bubbling has ceased, remove bleeder source from wheel cylinder and tighten the bleeder valve.

Note	Ensure that the free end of the hose from the master cylinder remains immersed during the entire bleeding process.

Caution	Do not use aircraft hydraulic fluid because this will damage the master cylinder sealings. Automobile brake fluid must be used only.

5.36 Parking brake system (refer to figure 5-4.)

When using the A240 parking brake the same lever is used as for operating the brake. After pulling the lever as for normal brake operation, (see 2) twisting the lever to the right or left to lock the brake in the on position. Do NOT fully "trust" any parking brake - secure aircraft with ropes and/or wheel chocks for proper security and safety.

Section 6
Structures – Aileron and flap control system

Table of contents **Page**

6.1 Aileron and flaps control system

6.2 Description

The aileron control system is comprised of push-pull rods and bellcranks, that which link the control stick to the ailerons.

6.3 Trouble shooting

For some of the remedy procedures in the following trouble shooting chart it may be necessary to re-rig system, and if so then refer to paragraph 6.17.

Trouble	**Probable Cause**	**Remedy**
Lost motion in the control stick.	Broken brackets or worn rod end bearings.	Replace worn or broken parts.
	Sprung bellcranks.	Replace bellcrank.
Resistance to the control stick movement.	Bellcranks distorted or damaged.	Replace bellcrank.
Control stick not centering with aileron neutral.	Improper adjustment of aileron push-pull rods.	Adjust in accordance with paragraph 6.17.
Incorrect aileron travel	Push-pull rods not adjusted properly.	Adjust in accordance with paragraph 6.17.
	The control stick adjustment-screws are not adjusted properly.	Adjust in accordance with paragraph 6.17.

6.4 Control stick linkage

6.5 Description

Both control sticks are linked together by a control rod system to ensure synchronized movement. The linkage consists of two bearings connected on the floor of the cabin in front of the seats. A translator connects the control sticks linkage to the aileron linkage, which uses several bellcranks to establish the connection to the control surfaces. An illustration of the aileron system is given in figure 6-1.

Figure 6-1

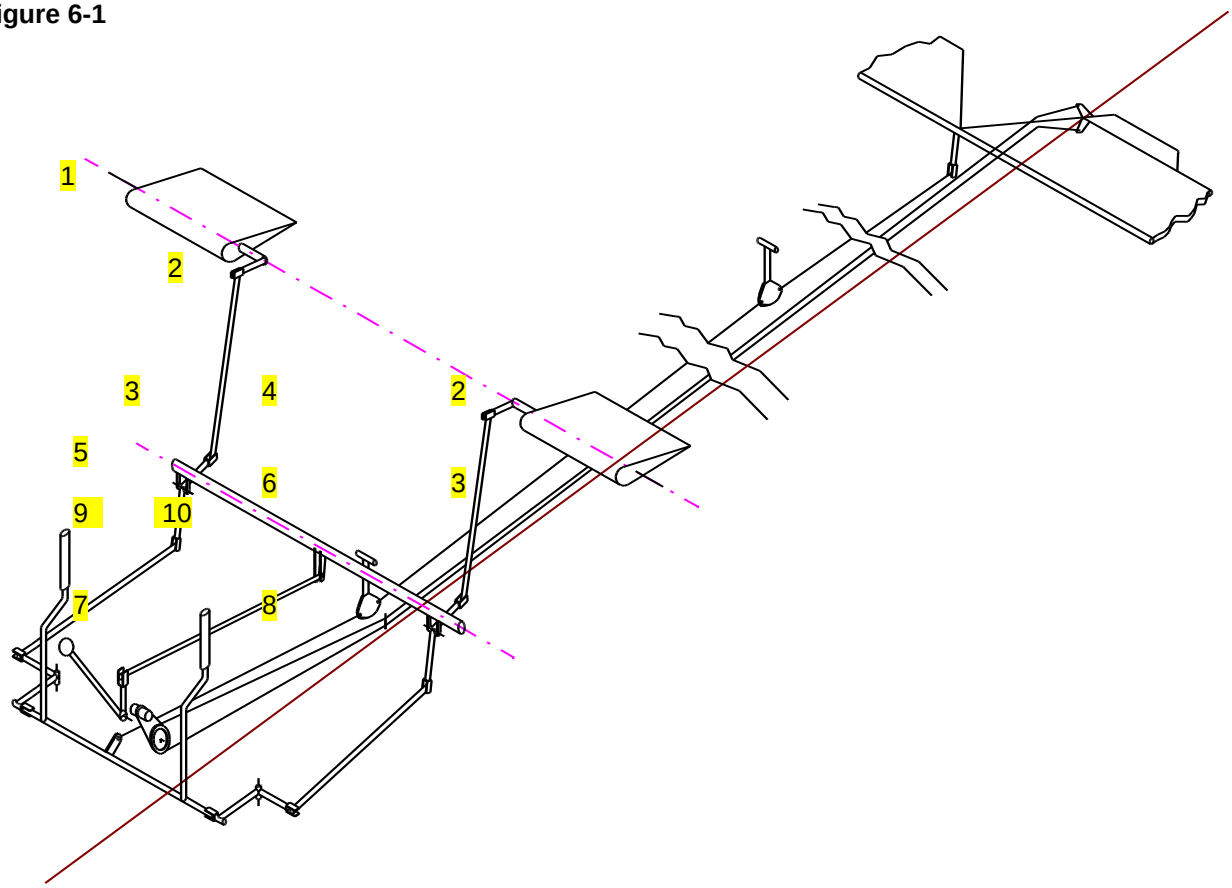

1. Ailerons and flaps
2. Rod between flaps and mixer
3. Controls lever
4. Mixer controls lever
5. Rod on the bottom
6. Rod for control of flap
7. Holder of controls Column
8. Controls lever
9. Flap lever
10. Controls stick

6.6 Removal and installation

6.6.1 Required Tools: 3/32 allen wrench, 10 mm wrench, wire cutting pliers, soldering iron.
6.6.2 Parts required: cable ties, solder, 3 x self-locking nut (M6).
6.6.3 Level of Maintenance: **Heavy**
6.6.4 Certification required: **A&P Mechanic or LSA Repairman Maintenance**

In general the control stick linkage needs no regular servicing, due to replacement of other parts of the aileron control system, it may however require readjustment to ensure the correct travel of the ailerons and access to the linkage will be required for this purpose.

a. Remove seats from the cabin.
b. Remove the control stick grips and disconnect wiring from the control stick switches.
c. Remove wiring from the control stick tubes and linkage (remember position of the control stick wiring and cable ties, for reinstallation purposes).

Caution	If the control stick wiring is not installed correctly, binding of the control stick and cracking or chafing of wiring will occur and may cause fire.

Reassembly is done in reverse order to the steps outlined above. Tighten screws and bolts to the torque settings in accordance to the values given in Section 1.

Caution	**DO NOT REUSE SELF-LOCKING NUTS.**

6.7 Aileron and Flap Control Rods

6.8 Description

Aileron and flap control rods run from the control stick linkage joint through the fuselage to the aileron control surfaces through a series of bellcranks. The whole aileron control rod system requires no regular servicing. For details see Figure 6-2

Figure 6-2

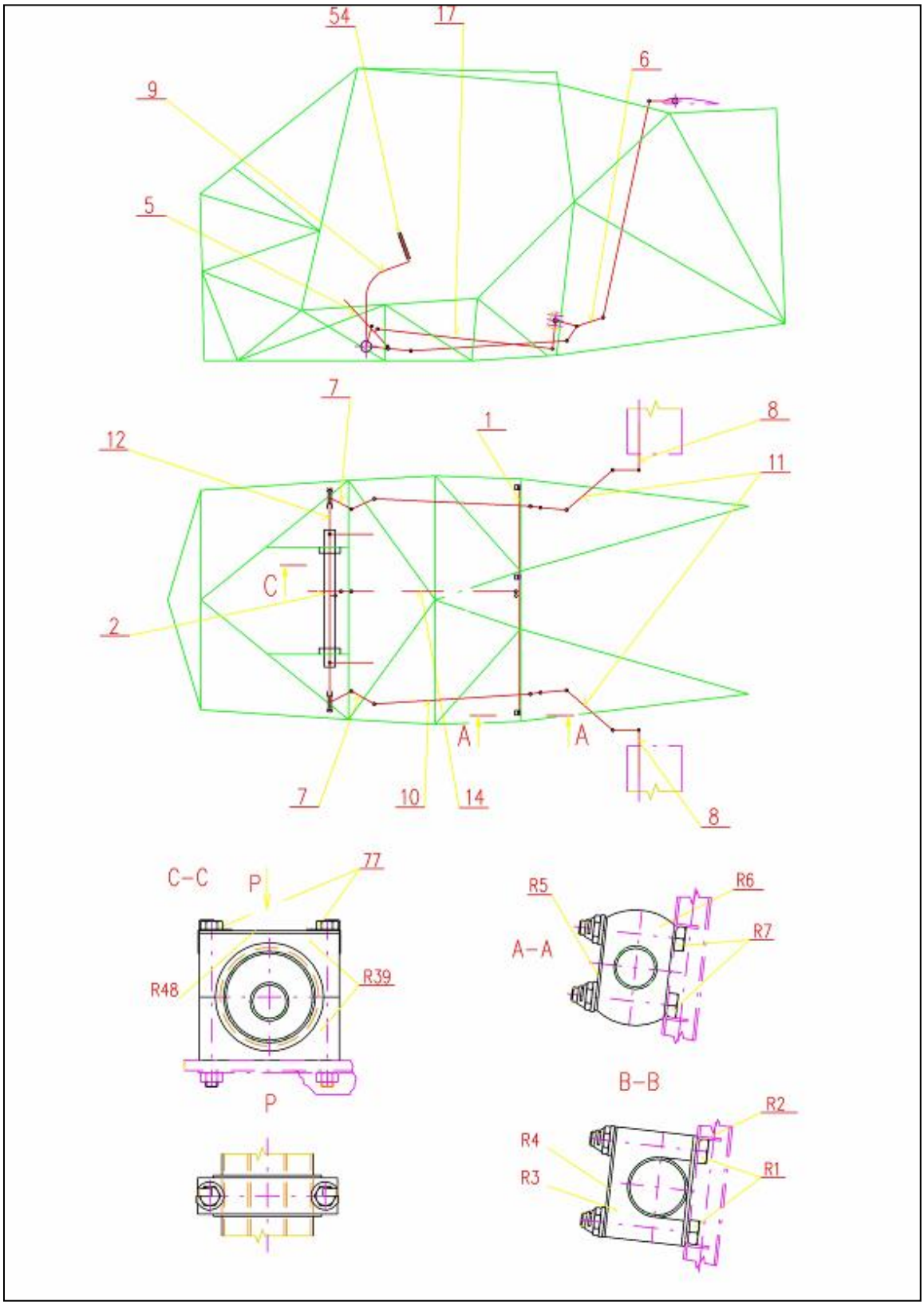
54
17
6
9
5
7
1
8
12
11
C
2
A
A
7
10
14
8
C-C
P
77
R48
R39
P
R5
R6
A-A
R7
B-B
R2
R4
R3
R1

6.9 Removal and installation

6.9.1 Required Tools: 10 mm wrench
6.9.2 Parts required: self-locking nuts as required.
6.9.3 Level of Maintenance: **Heavy**
6.9.4 Certification required: **A&P Mechanic or LSA Repairman Maintenance**

The ailerons and flaperons control levers are located on the floor in the central part of the cockpit. The motion is transferred via a tie rod to the countershaft for lateral control in the control system of ailerons / flaperons.
Additionally, the center cover (located between the seats) and the control stick floor covers can be removed if required. When it is necessary to replace parts of the control rod system, always use new self-locking nuts and torque to the values given in Section 1.

6.10 Bellcranks

6.11 Description

The aileron and flaps control rod system is driven by various bellcranks located in the fuselage, refer to figure 6-1. for a detailed illustration. Bellcranks need no regular servicing.

6.12 Removal and installation

Refer to paragraph 6.9.

6.13 Ailerons and flaps

6.14 Description

The ailerons are constructed from a fiberglass composite material, hinged to the trailing edge of the wings.

6.15 Removal and installation

6.15.1 Required Tools: 2 pieces 8 mm wrench
6.15.2 Parts required: 10 x self-locking nut (M6)
6.15.3 Level of Maintenance: **Heavy**
6.15.4 Certification required: **A&P Mechanic or LSA Repairman Maintenance**

a. Disconnect the aileron rods.
b. Remove screws and nuts attaching aileron hinges to 5 holders of the trailing edge of the wing.
c. Using care, detatch the aileron from the wing and fuselage.
d. Install aileron in reverse order to the preceding steps.
e. Secure outboard hinge screw with safety-wire.
f. If rigging was correct and the push-pull rod adjustment was not disturbed, it should not be necessary to rig system. Otherwise rig aileron system in accordance with paragraph 6.17.

Caution	Use new self-locking nuts and torque to the values given in Section 1

6.16 Repair

Repair is limited to replacing the copper bushings or hinge bolts and restoring dents or smaller cracks on edges. Since ailerons are designed as a sandwich construction, it is strongly recommended to replace or return to factory for repair, if significant damage is detected on the aileron structure.

6.17 Rigging

6.17.1 Required Tools: 10 & 13 mm wrench, screwdriver, Jig for adjustment
6.17.2 Parts required: Safety wire, self-locking nuts as required.
6.17.3 Level of Maintenance: **Heavy**
6.17.4 Certification required: **A&P Mechanic or LSA Repairman Maintenance**

a. For the flaperon control levers to apply the correct range of input but will stabilize in the neutral position, (pattern see figure 6-2) ensure the control stick and wing flap lever are both set to the neutral position before completing the rig.
b. Gradually set the length of the rods from the control stick casing up to the rods linked to the ailerons ensuring that both the aileron and control stock are in the neutral position before completing the rig.
c. Check the maximum deflections of the ailerons and flaperons to make sure the correct range of movement can be reached for both the controls. (per wing/flaperon drawing below).

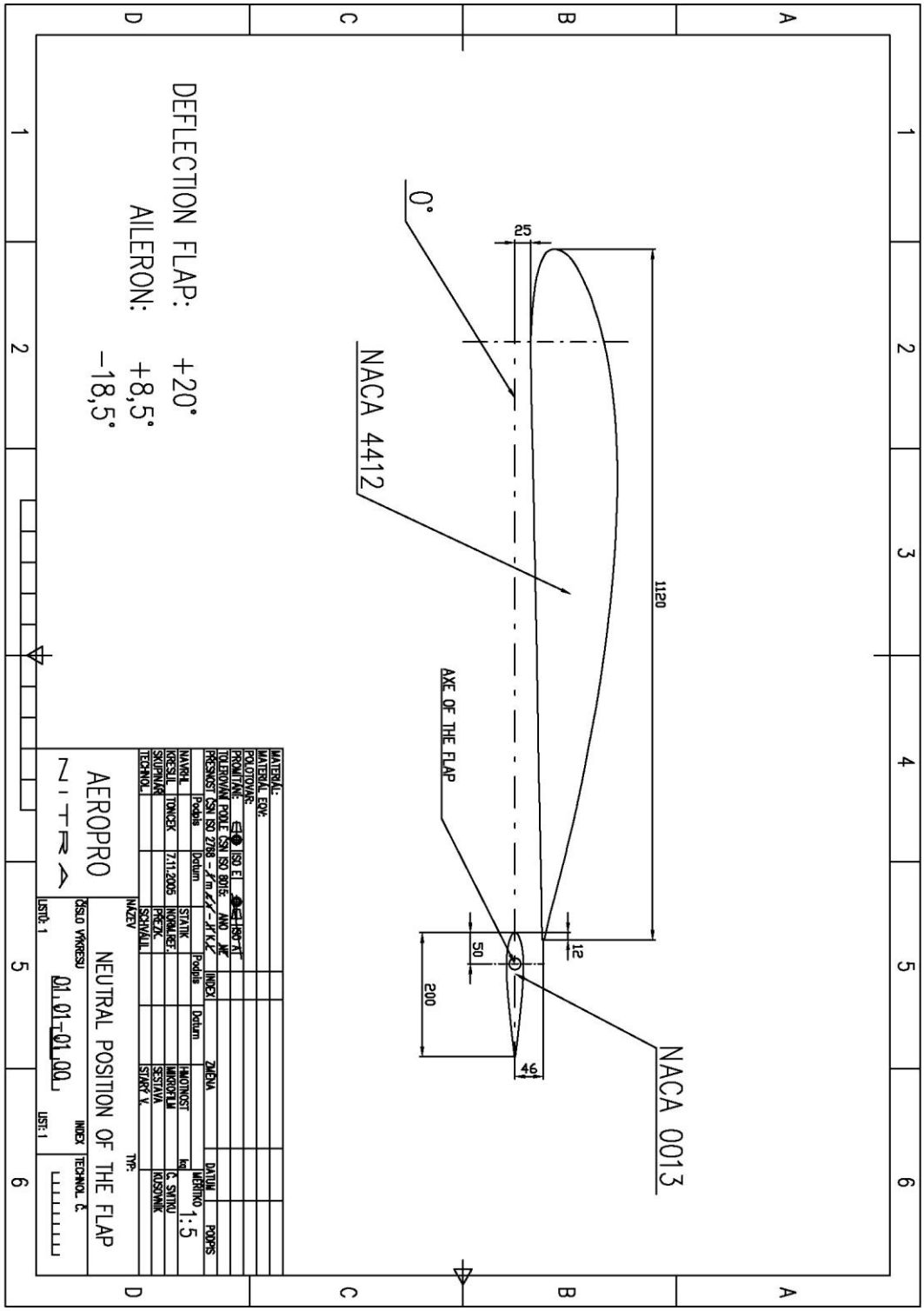
NACA 0013
1120
25
12
50
200
46
AXE OF THE FLAP
0°
NACA 4412
DEFLECTION FLAP: +20°
AILERON: +8,5°
−18,5°
NEUTRAL POSITION OF THE FLAP
AEROPRO
Z I T R A
01.01-01.00
1:5

Section 7

Structures – Elevator control system

Table of contents **Page**

7.1 Elevator control system

7.2 Description

The elevator is operated by the forward and rearwards movement input on the control stick, acting through a bellcrank and a push-pull tube. An elevator trim tab is installed on the elevator tailing egde and is described in Section 8.

7.3 Trouble shooting

Note	Due to remedy procedures in the following trouble shooting chart it may be necessary to re-rig the system; if so, refer to paragraph 7.9.

Trouble	**Probable Cause**	**Remedy**
No response to control stick fore-and-aft movement.	Quick release connector at aft end of push-pull tube disconnected.	Join quick release connector properly.
	Forward end of push-pull tube disconnected.	Attach push-pull tube correctly.
	Connection between bellcrank and push-pull tube disconnected.	Attach push-pull tube correctly.
Binding or jumpy motion felt in movement of elevator.	Defective bellcrank pivot bearing.	Replace bellcrank bearing.
	Nylon grommet bearings binding.	Replace grommet.
	Defective elevator hinges or lubrication needed.	Replace defective hinges or lubricate per Section 2.
Elevator fails to attain prescribed travel.	Interference beneath center cover or behind rear cabin bulkhead.	Rig system in accordance with paragraph 7.9.

7.4 Elevator

7.5 Removal and installation (refer to figure 4-3 and 4-4)

8.5.1 Required Tools:	According to 4.15
8.5.2 Parts required:	self-locking nut (M8)
8.5.3 Level of Maintenance:	**Heavy**
8.5.4 Certification required:	**A&P Mechanic or LSA Repairman Maintenance**

7.6 Repair

The tail unit is of a conventional design with its load-bearing frame welded of steel tubes. A fabric-covered rudder is attached by three hinges. The control lever situated on its underside. The horizontal stabilizer surfaces are braced (both sides) by two struts attached to the bottom edge of the main fuselage. The elevator has a one piece leading edge which is attached to the horizontal stabilizer by five suspension points as a total, with drive arm attached in the middle. The surface of all the horizontal tail unit is fabric-covered.

Repair of elevator skin

If damage occurs under operation, the skin can be repaired by replacing a whole section of the damaged fabric, or for minor damage, by a local repair using a patch. Such repairs may only be carried out using the same materials as used for the aircraft fabrication.

Repairs of the lattice-work

The operator is only allowed to carry out repairs on the lattice-work that does not require either use of any welding equipment or application of thermal treatment for straightening. Straightening of such structural members is permitted however, if the deflection of which does not exceed 3% member length-member diameter ratio. A local deflection (depression) not exceeding 5% of the tube dimension in its diameter can be considered admissible providing the tube is not damaged by cracks or some other non-reversible deformation.

7.7 Bellcrank

7.8 Removal and installation (refer to figure 7-1.)

8.8.1 Required Tools:	head screwdriver, 10 mm wrench.
8.8.2 Parts required:	4 x self-locking nut (M6).
8.8.3 Level of Maintenance:	**Heavy**
8.8.4 Certification required:	**A&P Mechanic or LSA Repairman Maintenance**

Figure 7-1

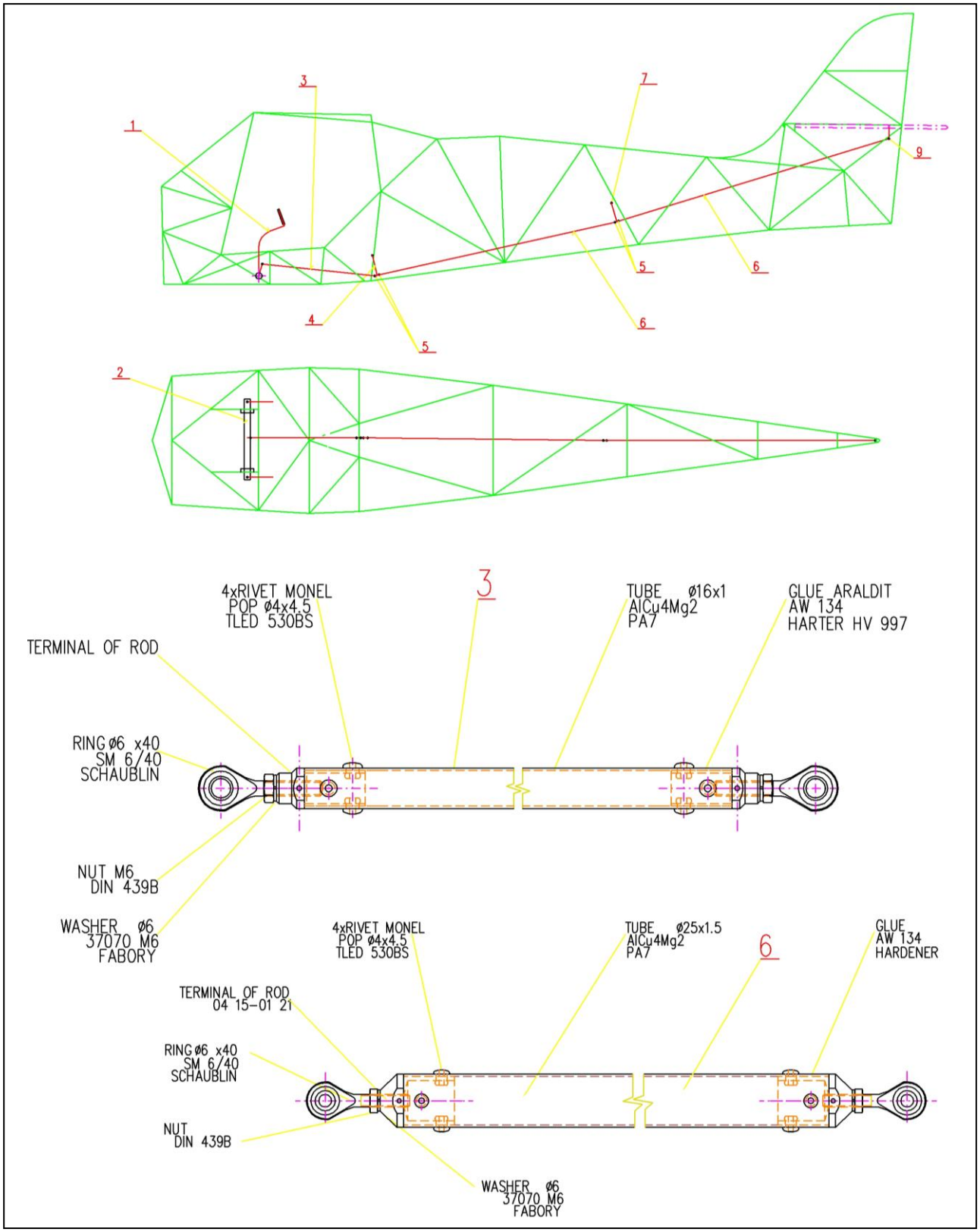

1. controls stick

2. holder controls stick
3. short rod
4. front bellcrank
5. bearing
6. long rod
7. center bellcrank
8. bearing on the elevator

a. remove pilot seat (refer to Section 3)
b. disconnect forward and aft push-pull tube from bellcrank
c. remove pivot bolt and remove bellcrank
d. reverse preceding steps for installation
e. check for free play of push-pull tubes and bellcrank

7.9 Rigging

8.9.1 Required Tools:	14 mm open-end wrench
8.9.2 Parts required:	Loctite 243 (medium strength)
8.9.3 Level of Maintenance:	**Heavy**
8.9.4 Certification required:	**A&P Mechanic or LSA Repairman Maintenance**

a. Locate neutral position of elevators by streamlining elevators with stabilizer.
b. Place an inclinometer on the elevator and set to zero.
c. Check for centered positon of control stick.
d. If required, adjust stick center position at the aft end of push-pull tube and secure with **Loctite 243**.
e. Check elevator travel as outlined in figure 1-1.

Section 8

Structures – Elevator trim control system

Table of contents **Page**

8.1 Elevator trim control system

8.2 Description

The aircraft trim control lever is located on the floor on a longitudinal tube and its motion is directed by means of cables and bowden cables to the elevator trim tab.

8.3 Trouble Shooting

TROUBLE	PROBABLE CAUSE	REMEDY
Trim tab fails to move.	Broken controls cable	Replace cable
	Unconnected cable on the trim tab lever	Check all controls road
Incorrect trim tab travel.	Inside in the bowden is dirt	Check and clean cable and lubricate
	Controls cable is rusty	Removal cable and clean bowden and lubricate

Figure 8-1

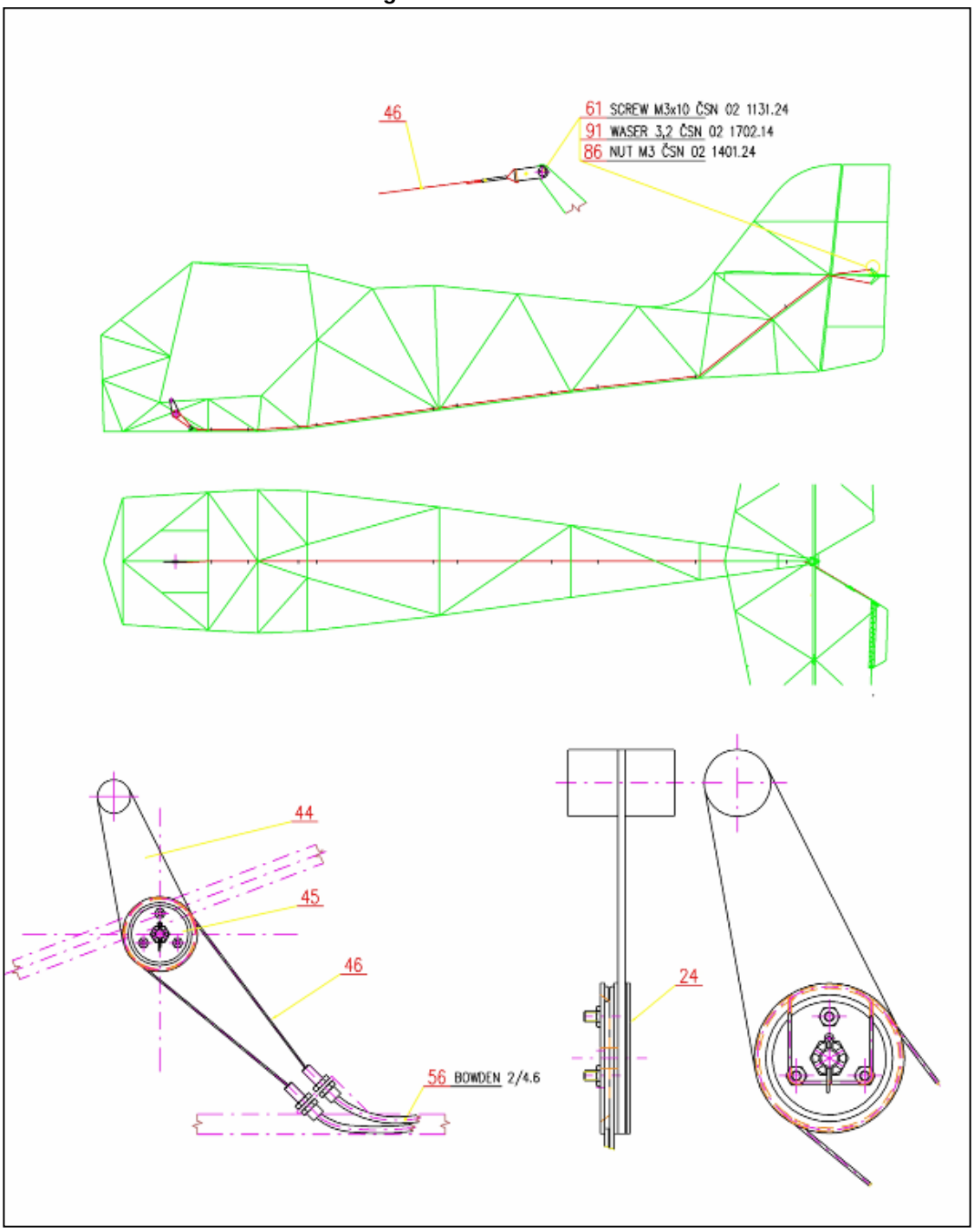

24. Leathern circlet
45. Circlet for holder of cable
56. Bowden cable
91. Washer
44. Controls lever
46. Controls cable
61. Screw
86. Nut

Figure 8-2

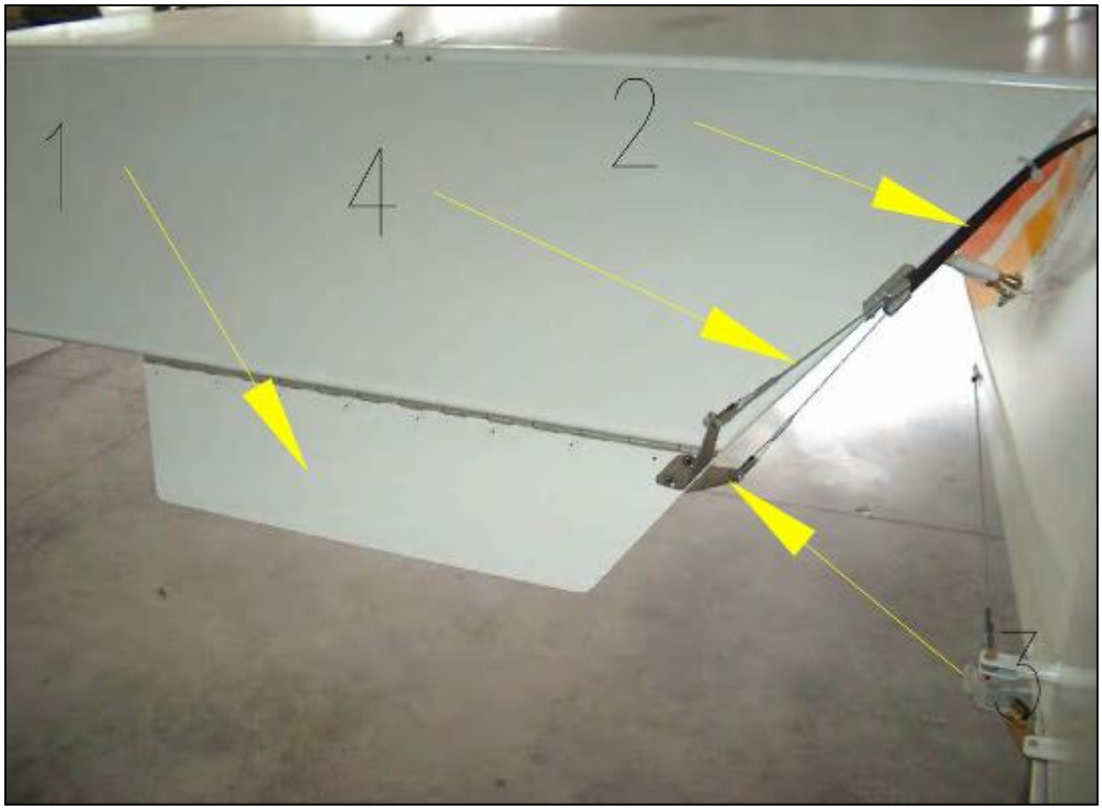

1. Trim tab
2. Bowden Cable
3. Lever on the trim tab
4. Control cable

8.4 Trim tab

8.5 Inspection and repair

The trim tab panel is attached to the elevator by an aluminium hinge, therefore it can not be removed from the elevator. The hinge should be inspected for cracks at regular service intervals. If cracks are found in the paint of the hinge, ensure cracks are not structural and if so, will require no further servicing.

8.6 Trim lever

8.7 Removal and installation

8.7.1 Required Tools:	screwdriver, 7 mm open-end wrench
8.7.2 Parts required:	Loctite 243 (medium strength)
8.7.3 Level of Maintenance:	**Light**
8.7.4 Certification required:	**A&P Mechanic or LSA Repairman Maintenance**

a. Remove the seats
b. Unscrew the rod screws of the bowden cable in the cockpit under the seat.
c. Unscrew the screws of the fork at the end of the cable on the elevator trim. See 3 pict. 8-2
d. Release the cable and unscrew the securing screw as seen at 45 pict. 8-1
e. Carefully remove the lever from the cockpit area considering the trim control cable.

f. Follow the procedures above in the reverse sequence during reinstallation

8.13 Rigging

8.13.1 Required Tools: Allen wrench
8.13.2 Parts required: Cotter pin (1.6 x 20 mm)
8.13.3 Level of Maintenance: **Light**
8.13.4 Certification required: **LSA Repairman Maintenance or Owner**

a. Move controls lever to the center position.
b. Trim tab must be in the center position
c. Check for correct movement of trim tab. Pushing the control lever to the "forward" and checking the Trim Tab moves ”downward”.

Note	Always use a new cotter pin when reestablishing the connection of push-pull rod at the trim tab bracket.

Section 9

Structures – Rudder control system

Table of contents **Page**

9.1 Rudder control system

9.2 Description

Rudder control is maintained through the use of conventional rudder pedals which also control nose wheel steering. The system is comprised of rudder pedals, a bellcrank, cables and pulleys, all of which link the pedals to the rudder and nose wheel steering.

Rudder pedals are located in the front of the cockpit on the floor. The pedal motion is transferred by steel cables to the rudder.

9.3 Trouble Shooting

Note	Due to remedy procedures in the following trouble shooting chart it may be necessary to de-rig the system, refer to paragraph 9.11.

Trouble	**Probable Cause**	**Remedy**
Rudder does not respond to pedal movement.	Broken or disconnected cables.	Connect or replace cables.
Binding or jumpy movement of rudder pedals.	For trigear aircraft, possible problem with nosewheel steering cable adjustment	Properly adjust nosewheel steering cables.
	Cables not riding properly on pulleys. Binding, broken or defective pulleys or cable guards.	Route cables correctely over pulleys. Replace defective pulleys and install guards properly.
	Defective pedal bar bearings.	Replace bearings.
	Nose gear strut needs lubrication.	Lubricate copper bushings of nose gear strut.
Lost motion between rudder pedals and rudder.	Insufficient cable tension.	Adjust cable tension in accordance with paragraph 10.11.
Incorrect rudder travel.	Incorrect rigging.	Rig system

9.4 Rudder Pedal Assembly (refer to figure 9-1)

9.5 Removal and Installation

9.5.1 Required Tools: 8/10/17 mm wrench.
9.5.2 Parts required: self-locking nuts (M6).
9.5.3 Level of Maintenance: **Heavy**
9.5.4 Certification required: **A&P Mechanic or LSA Repairman Maintenance**

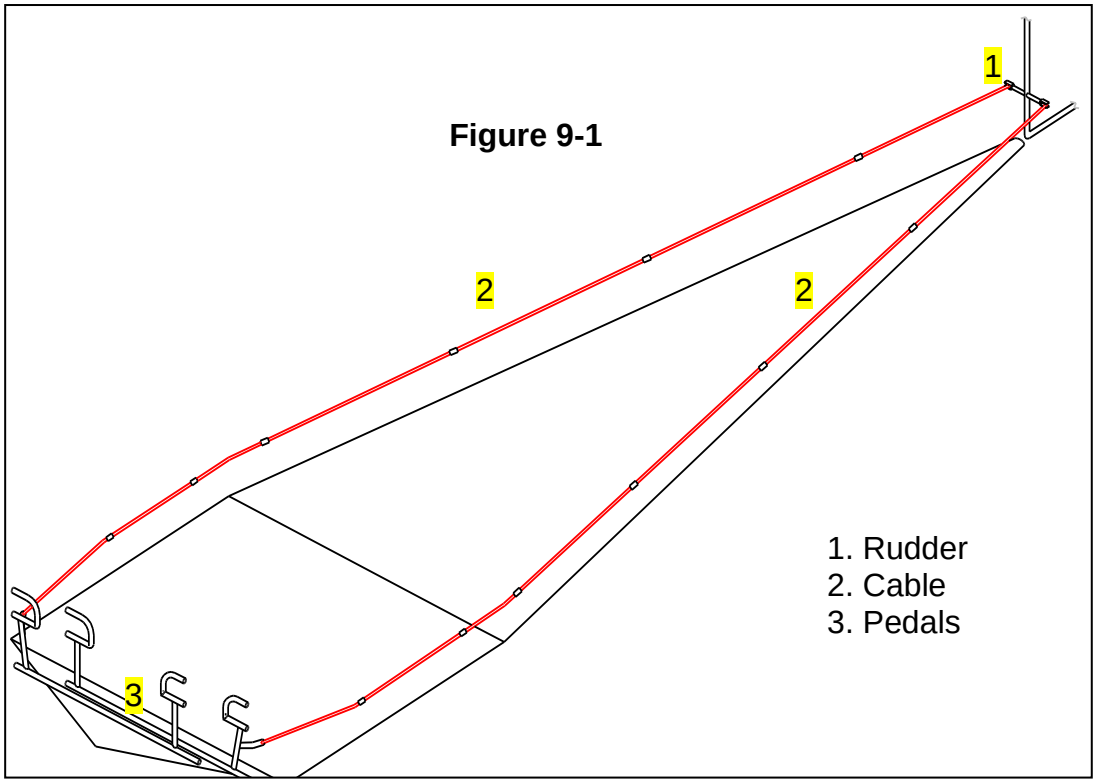

Figure 9-1

a. Disconnect cables from rudder pedals.
b. Disconnect cable for nosewheel control from rudder pedals.
c. Unscrew brackets from fuselage and remove pedal linkage assemblies.
d. Reverse preceding steps for reinstallation.
e. Rig system in accordance with applicable paragraph in this section, safety clevises and reinstall all items removed in step **a** and **b**.

Note	Rudder bar assemblies should be checked for excessive wear before installation. The bearing requires no lubrication unless binding occurs. A few drops of general purpose oil should eliminate such binding.

9.6 Rudder

9.7 Removal and installation

9.7.1 Required Tools: 10mm wrench.
9.7.2 Parts required: Self-locking nut (M6), safetying
9.7.3 Level of Maintenance: **Heavy**
9.7.4 Certification required: **A&P Mechanic or LSA Repairman Maintenance**

c. Disconnect cables from rudder.
d. Remove all hinge bolts upward to disengage
e. Reverse preceding steps for installation.
f. Rig system in accordance with applicable paragraph in this section.

9.8 Repair

If damage occurs under operation, the skin can be repaired by replacing a whole part of the damaged fabric, or by a local repair using a patch. Such repairs may only be carried out using the same materials as applied at aircraft fabrication. (Polyfiber)

9.9 Cables

9.10 Removal and installation

9.10.1 Required Tools:	10 mm wrench, new cable and Nicopress tools
9.10.2 Parts required:	2 x self-locking nut (M6)and 2x M5
9.10.3 Level of Maintenance:	**Heavy**
9.10.4 Certification required:	**A&P Mechanic or LSA Repairman Maintenance**

a. Disconnect cables at rudder pedals.
b. Disconnect cables at rudder.
c. Cut cables on the rudder side of the cable and remove cables from the cockpit end.
d. Only use new cables when carrying out the reinstallation.
e. When installating the new cable, feed the cable though the cockpit end of the cable at the same point from where it was removed.
f. When installing the cables you will have to use Nicopress tools to seal the ends of cables, you can prepare the front end out side of fuselage before starting the installation.
g. Set the rudder pedals in the neutral position and ensure the rudder surface is also set to neutral. Then make sure the cables are of suitable, equal tention. Now secure the second ending by compressing with the Nicopress tool.
h. Check quality of connections of the cables to rudder and pedals.

WARNING	Be sure rudder moves in correct direction when operated by pedals.

9.11 Rudder centering device and rudder trim adjustment

See information about the Aeorpro Rudder-Centering Device and rudder trim adjustment on our Aerotrek-tips web page at... **www.aerotrek.aero/aerotrek-tips.htm** -- or go direct to the .pdf file with information at... **www.aerotrek.aero/aerotrek-tips/aeropro-rudder-trim-adjustment.pdf**

Section 10

Engine - for standard 912ULS engine - for 914UL installations, see supplementary Section 10A

Table of contents **Page**

Table of contents (continued) **Page**

10.1 Engine cowling

The engine cowling is comprised of an upper and lower cowl segment. Quick-release screw fasteners are used at the cowling to fuselage attachment points fixing the cowling to the firewall. Quick-release screws are also used along the side surfaces to hold lower cowling and upper cowling segments together. Both cowl segments are constructed from carbon fiber composites.

10.2 Removal and installation

11.2.1 Required Tools:	Screwdriver
11.2.2 Parts required:	None
11.2.3 Level of Maintenance:	**Light**
11.2.4 Certification required:	**Owner**

Removal and installation of engine cowling is accomplished by initially releasing the quick-release fasteners at the side surfaces. Then remove the upper cowling by disengaging it from top of the fire wall, then lifting the upper cowling away from the lower cowling from the front of the aircraft. Disconnect the Carburetor heater controls (see figure 10-1, N. 1), the orange air intake tube (N. 2), the oil cooler connections (N. 3), release the oil cooler but do not disconnected oil hoses, and disconnect the water cooler holder (N. 5, 6)

Loosen the quick-release screws of the lower cowling segment (N.8) and remove from the front of the aircraft. Take care to disconnect the electrical wiring to the landing light in lower cowling (if installed N.7) when removing the lower cowling.

When reinstalling the cowlings – reverse the above process.

Figure 10-1

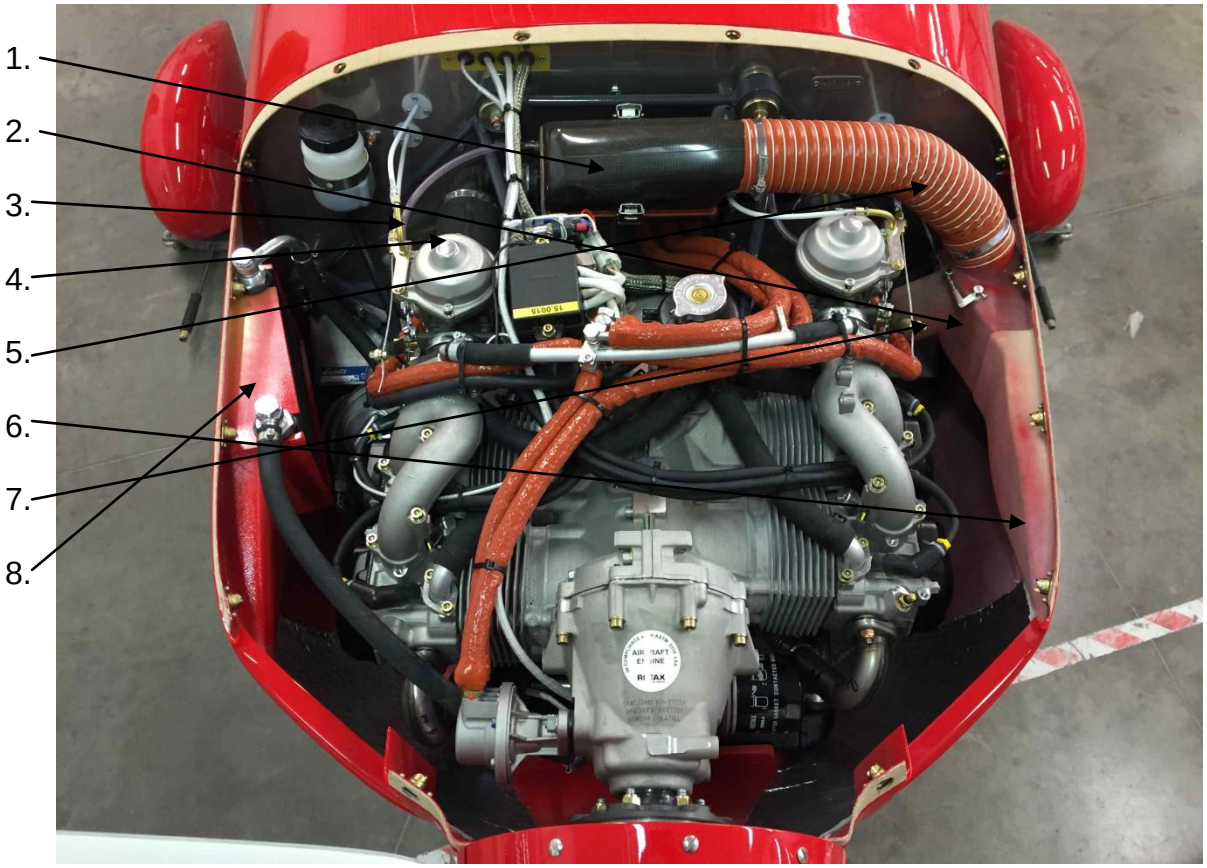

1. Airbox
2. Carburetor heat air intake control box
3. Float chamber vent lines
4. Rubber tube between Carburetors and Airbox
5. Tube between Airbox and Carburetor Heat
6. Fresh air intake
7. Heated air intake
8. Oil cooler

10.3 Cleaning and inspection

Wipe the inner surfaces of the cowling segments with a cloth saturated with cleaning solvent. If the inside surface of the cowling is coated heavily with oil and dirt, allow solvent to soak until the foreign material can be removed. Wash painted surfaces of the cowling with a solution of mild soap and water and rinse thoroughly. After washing, it is recommended to apply a coat of wax to the painted surface to prolong paint life. After cleaning, inspect the cowling for cracks. Repair all defects to prevent spread of any damage.

10.4 Repair

11.4.1 Required Tools:	As required
11.4.2 Parts required:	Epoxy Resin, carbon fiber tape, rovings, fabrics.
11.4.3 Level of Maintenance:	**Heavy**
11.4.4 Certification required:	**A&P Mechanic or LSA Repairman Maintenance**

If cowling skins are extensively damaged, new complete sections of the cowling should be installed. If cracks are detected in the carbon fiber cowl segments, they may be repaired using L285 Epoxy Resin or similar (R&G L20), reinforcing with suitable carbon fiber fabrics. Follow the instructions on the container for a successful completion of the repair.

10.5 Engine

The Rotax 912 series engines are 4-stroke, 4 cylinder horizontally opposed, spark ignition engines, featuring one central camshaft with push rods and OHV (overhead valves). Cylinder heads are liquid cooled. Lubrication system is a dry sump forced type. It is equipped with dual breakerless capacitor discharge ignition and two constant velocity carburetors. Prop drive is via reduction gear with integrated shock absorber and overload clutch. Specific engine datas are given in figure 11-2.

10.6 Engine data

Figure 10-2

Descriptions	**912 ULS**
Dimensions	
Bore…….	3.31 in
Stroke……..	2.40 in
Displacement…….	82.5 in3 (1352 cc)
Compression ratio……...	11 : 1
Weight (without exhaust, radiator, air intake system)….	134 lb
Speed	
Takeoff engine rpm (maximum)……	5800 rpm
Continuous engine rpm (maximum)……...	5500 rpm
Idle speed (range - preferably 1500-1600 rpm)	1400 - 1800 rpm
Gear ratio……..	2.43 :1
Performance	
Takeoff performance…….	100 hp
Continuos performance……	92 hp
Acceleration Max. negative "g" for 5 seconds…	-0.5
Oil pressure	
Max. for short period at cold start……	102 psi
Min. (below 3500 rpm)…….....	12 psi
Normal (above 3500 rpm)……	29 - 73 psi
Deviation from max bank angle ……	40°
Oil temperature	
Max……..	266° F
Min……...	120° F
Normal…….	190-230° F
Coolant temperature	
Max.....	248° F
Normal…….	167-230° F
Engine start, operating temperature	
Max……..	normal
Min……	-13° F
Fuel pressure: Max……	5.8 psi
Min.....	2.2 psi
Electric starter……	12V, 0.6 kw
Generator……	12V, 20A
Spark plugs, NGK.....	DCPR8E
Spark plug gap……..	0.027 in
Torque.....	176 in/lb

10.7 Trouble shooting

Refer to Rotax 912-series Maintenance Manual, latest issue. It must be understood that the table below should only be seen as a general guide for locating causes of engine failures.

Trouble	Probable Cause	Remedy
Engine will not start.	Fuel tank empty.	Fill with proper grade of gasoline.
	Improper use of starting procedure.	Review starting procedure.
	Fuel shut-off valve closed.	Turn shut-off valve ON.
	Tank screen, or fuel lines plugged.	Remove and clean thoroughly. Remove moisture.
	Engine flooded.	Refer to paragraph 10.50.
	Defective ignition system.	Refer to paragraph 10.32.
	Excessive induction air leaks.	Correct the cause of leaks.
	Defective magneto switch or grounded magneto leads.	Check continuity. Repair or replace switch or wiring.
	Defective carburetor.	Repair or replace carburetor.
	Spark plugs fouled or improperly gapped.	Remove and clean: Check gaps and insulators. Check cables to persistently fouled plugs. Replace defective plugs.
	Defective magnetos or ignition amplifiers.	Replace defective parts in accordance with Rotax maintenance manual.
	Spark plugs loose.	Tighten to specified torque.
	Water in fuel system.	Drain fuel tank sump, fuel lines and carburetors.
	Excessive starter slippage.	Replace starter motor.
Engine will not run at idling speed.	Idle speed incorrectly adjusted.	Refer to paragraph 10.27.
	Carburetor idling jet plugged.	Clean carburetor.
	Air leak in intake manifold.	Tighten loose connections or replace damaged parts.
	Spark plugs fouled by oil escaping past piston rings.	Top overhaul engine.
Rough idling.	Idle speed incorrectly adjusted.	Refer to paragraph 10.27.
	Fouled spark plugs.	Remove and clean, adjust gaps. Test harness cables. If persistent perform top overhaul.
	Small air leak into induction system.	Tighten connections or replace damaged parts.
	Defective engine.	Check compression and listen for unusual engine noises. Engine repair is required.

Engine does not accelerate properly.	Cold engine.	Warm up longer.
	Restriction in carburetor air intake.	Remove restriction and clean filter.
	Restriction in carburetor jets, low float level.	Clean and repair carburetor.
	Incorrect carburetor synchronizing.	Synchronize carburetors in accordance to Rotax maintenance manual.
	Incorrect idle setting.	Refer to paragraph 10.27.
Engine does not shut off with ignition key in off position.	Broken wiring or defective magneto switch.	Repair wiring or replace magneto switch.
Engine runs rough at high speed.	Loose mounting bolts or rubber pads defective.	Tighten bolts or replace mounting pads.
	Propeller out of balance.	Remove and balance.
	Spark plug gap too large or insulator damaged.	Replace damaged parts.
	Ignition cable insulation damaged.	Test for leakage at high voltage and replace damaged ignition lead.
	Float chamber bleed hoses disconnected or broken.	Connect or replace bleed hoses.
Sluggish operation and low power.	Throttle not opening completely.	Rig per paragraph 10.37.
	Spark plugs fouled or improperly gapped.	Remove, clean and regap or install new plugs.
	Incorrect carburetor synchronizing.	Synchronize carburetors in accordance to Rotax maintenance manual.
	Incorrect carburetor mixture setting.	Adjust carburetors in accordance with Rotax maintenance manual.
High cylinder head temperature.	Low grade fuel.	Drain and fill with correct grade of fuel. Refer to Section 2.
	Excessive carbon deposits in cylinder head and on pistons.	Install new cylinders and piston rings or new engine.
	Low water level in cooling system.	Refill with suitable coolant and check for leaks.
	Dirt between cylinder fins.	Clean thoroughly.
High oil temperature.	Low oil supply.	Replenish.
	Oil viscosity too high.	Refer to section 2 for seasonal grades.
	Oil regulator flap closed.	Set oil regulator flap to open position.
	Prolonged high speed operation on ground.	Hold ground running above 2500 rpm to a minimum.

Low oil pressure.	Low oil supply.	Replenish.
	Oil viscosity too low.	Drain and refill with correct seasonal grade. Refer to Section 2.
	Foam in oil due to emulsification of alkaline solids.	Drain and refill with fresh oil. Refer to Section 2 for seasonal grade.
	Defective pressure sensor.	Replace pressure sensor.
	Oil pump defective.	Remove and inspect. Examine engine. Metal particles from damaged pump may have entered engine oil passages.
	Oil pressure line broken, disconnected or pinched.	Inspect, replace or connect line.
	Internal leak, burned bearings, or damaged gasket.	Major overhaul.
Oil leak at propeller shaft.	Damaged propeller driveshaft seal.	Replace in accordance with Rotax maintenance manual.
Low compression.	Cylinder wall-coating worn.	Replace cylinder and rings.
	Intake valves guides worn.	Top overhaul.
	Valves seats and faces worn.	Top overhaul.
	Piston rings excessively worn.	Top overhaul.
	Valves sticking in guides.	Top overhaul.

10.8 Removal

10.8.1 Required Tools: Screwdriver, phillips head screwdriver, edge cutter, gripper, 4-10 mm allen wrench, 8-17 mm wrench.
10.8.2 Parts required: Insulating tape
10.8.3 Level of Maintenance: **Heavy**
10.8.4 Certification required: **A&P Mechanic or LSA Repairman Maintenance**

If the engine is to be placed in storage or returned to the manufacturer for overhaul, proper preparatory steps should be taken prior to beginning the removal procedure. (Refer to Temporary storage in section 2 for preparation of the engine for storage.) The following engine removal procedure is based upon the engine being removed from the aircraft with the engine mount attached to the engine and all engine hoses and lines being disconnected at the firewall. The reason for engine removal will determine where components are to be disconnected.

Note	Tag each item disconnected to aid in identifying wires, hoses, lines and control cables when engine is being installed. Protect openings, exposed as a result of removing or disconnecting units, against entry of foreign material by installing covers or sealing with tape.

a. Place all instrument switches and fuel valves in the OFF position.
b. Remove engine cowlings
c. Disconnect the battery cable(s) and insulate the cable terminal(s) as a safety precaution.
d. Disconnect all wiring at the terminals on the right hand side of the firewall.

e. Disconnect wiring at voltage regulator terminal, located on lower right-hand side of the firewall, and remove cable ties and clamps as required.
f. Disconnect ground wiring from right hand side of the firewall.
g. Drain the oil from engine. Remove propeller and spinner.
h. Drain water from the engine cooling system by disconnecting one water radiator hose and opening the expansion tank cap.
i. Disconnect hose connection to the overflow bottle at the upper right hand side of the firewall.

Note	During the following procedures, remove any clamps or cable ties which secure controls, wires, hose, or lines to the engine, engine mount, or attached brackets, so that they will not interfere with removal of the engine. Omit any of the items which are not present on a particular engine installation.

k. Disconnect throttle and choke control at the carburetor and oil-temperature control. Ensure that these parts are free of the engine and the engine mount, taking care not to damage them by bending too sharply.

WARNING	Residual fuel and oil draining from disconnected lines and hose is a fire hazard. Take care to prevent accumulation of such fuel and oil when lines or hoses are disconnected.

l. Disconnect oil hoses from oil tank, located on the right-hand side of the firewall.
m. Disconnect fuel-, fuel-return- and fuel pressure (if installed) hoses from the firewall.
n. Disconnect the stopper and shock absorber of the nose leg from the engine mount.

Caution	Attach a support stand below the tail before removing the engine. The loss of engine weight will result in the aircraft becoming tail heavy. Do not raise engine higher than necessary when removing mount-to-firewall bolts. Raising the engine too high places a strain on the attach bolts and hinders their removal.

o. Attach a hoist to the inlet manifolds on top of the engine to support the engines weight.
p. Remove bolts attaching the engine mount to the firewall. Note the direction of bolt installation and position and the numbers of washers used. Steady the engine by hand as the last of the bolts are removed.

Caution	Hoist engine slowly and ascertain that all items attaching the engine and accessories to airframe are disconnected.

q. Disengage exhaust retaining springs and remove the exhaust system.
r. Remove exhaust downpipes from cylinder head (mark each downpipe location for reinstallation.)
s. Unscrew engine to mount attachment screws and remove engine mount.
t. Carefully guide the disconnected components away from the engine assembly.

10.9 Cleaning

The engine may be cleaned with a suitable solvent, then dried thoroughly.

Caution	Particular care should be given to electrical equipment before cleaning. Solvent should not be allowed to enter magnetos, starter, alternator and the like. Hence, protect these components before saturating the engine with solvent. Cover any fuel, oil and air openings on the engine and accessories before washing the engine with solvent. Caustic cleaning solutions should be used cautiously and should always be properly neutralized after their use.

10.10 Accessories removal

Removal of engine accessories for overhaul or for engine replacement involves stripping the engine of parts, accessories, and components to reduce the engine assembly to the bare engine. During removal, carefully examine removed items and tag defective parts for repair or replacement by a new part.

Note	Items easily confused with similar items should be tagged to provide a means of identification when being installed on a new engine. All openings exposed by the removal of an item should be closed by installing a suitable cover or cap over the opening. This will prevent entry of foreign particles. If suitable covers are not available, tape may be used to cover the opening.

10.11 Inspection

For specific items to be inspected refer to engine manufacturer's manual.

a. Visually inspect the engine for loose nuts, bolts, cracks and cooling fin damage.
b. Inspect brackets for cracks, deterioration and breakage.
c. Inspect all hoses for internal swelling, chafing through protective plys, cuts, breaks, stiffness, damaged threads and loose connections. Excessive heat on hoses will cause them to become brittle and easily broken. Hoses and lines are most likely to crack or break near the end fittings and support points.
d. Inspect for color bleaching of the end fittings or severe discoloration of the hoses.

Note	Avoid excessive flexing and sharp bends when examining hoses for stiffness.

e. All flexible fluid carrying hoses in the engine compartment should be replaced at engine overhaul or every five years, whichever occurs first.
f. For major engine repairs, refer to the manufacturer's overhaul and repair manual.

10.12 Engine build-up

Engine build-up consists of installation of parts, accessories and components to the basic engine to build-up an engine unit ready for installation on the aircraft. All safety wire, lock washers, plain nuts, elastic stop nuts, gaskets and all rubber connections should be new parts.

10.13 Installation (refer to figure 10-3.)

10.13.1 Required Tools:	Refer to paragraph 10.8
10.13.2 Parts required:	Various self-locking nuts, cable ties, hose clamps, safety wire (1.0 mm).
10.13.3 Level of Maintenance:	**Heavy**
10.13.4 Certification required:	**Rotax-certified technician**

Before installing the engine on the aircraft, install any items that were removed from the engine after it was removed from the aircraft.

Note	Remove all protective covers, plugs, caps and identification tags as each item is connected or installed.

Figure 10-3

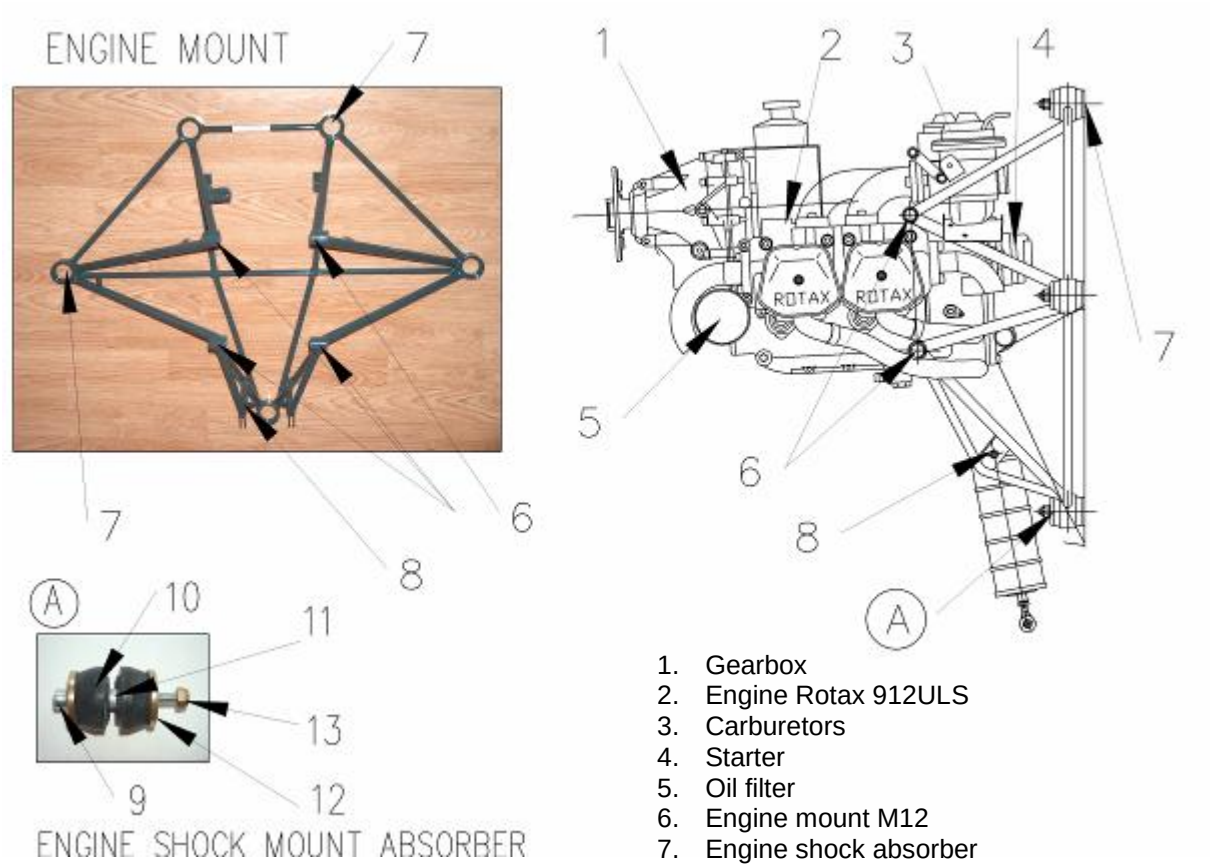

1. Gearbox
2. Engine Rotax 912ULS
3. Carburetors
4. Starter
5. Oil filter
6. Engine mount M12
7. Engine shock absorber
8. Holder for shock absorber
9. Socket head screws M8x80/10.9
10. Rubber chock mount pads
11. Collar bush
12. Shaped washer
13. Shelf-locking nut M8

a. Hoist engine assembly at the inlet manifold on top of the engine.
b. Install engine to the engine mount using M12 screws (refer to N.6 figure 10-3)

c. Place engine mount to the engine brackets and tighten engine-to-mount bolts to a torque value of 40 Nm/350 in.lb. Secure screws by wire, refer to figure 10-3 for installation details.
d. Install exhaust downpipes and exhaust system, do not tighten retaining screws at that time.
e. Move the complete assembly to the firewall and align the screws and the engine shock absorbers to the holes of the engine mount and the firewall. (refer to N.7 figure 10-3)
f. Install the engine-to-firewall screws and tighten to a torque value of 24Nm/212 in.lb. Remove the hoist and the support stand placed under the tail.
g. Connect airbox and carburetors to the arm of the engine mount and the engine assembly
h. Route the throttle and mixture controls to the carburetor and connect as noted in step “k” of paragraph 10.8.
i. Connect lines and hoses as follows:
   1. Fuel- and fuel-return hose at the firewall.
   2. Fuel pressure hose at the firewall (if fitted).
   3. Oil hoses to the oil tank.
   4. Cooling fluid hose from the overflow bottle to the expansion tank.
   5. Cabin heat hose to the heater shell on the exhaust system.
   6. Install all clamps attaching lines and hoses to the engine, the engine mount or the attached brackets.
j. Connect the wires and cables as follows:
   1. Ground wiring to the firewall.
   2. Wiring to voltage regulator on the firewall.
   3. Engine wiring to terminal at Connector-Box on firewall.
k. Install all clamps attaching the wires and cables to the engine, engine mount, or attached brackets.
l. Install the propeller and spinner (refer to Section 12).
m. Make sure the routing of exhaust pipes does not interfere with surrounding components and tighten the retaining screws on cylinder heads to a maximum torque value of 26 Nm/230 in.lb.
n. Service engine with proper grade and quantity engine oil. Refer to engine manufacturers manual or Aeropro A240 Pilot Operating Handbook.
o. Make sure all switches are in the OFF position, and connect battery cable(s) to battery.
p. Rig the throttle, choke and carburetor heat controls in accordance with paragraph 10.36 through 10.40.
q. Check engine installation for security, correct routing of controls, lines, hoses and tightness of all the components.
r. Bleed engine oil system in accordance with engine manufacturer maintenance manual.
s. Clean and install carburetor air filter. Be sure all hot and cold air ducts are installed and connected.
t. Perform an engine run-up and make final adjustments on engine controls.
u. Install engine cowling.

10.14 Flexible fluid hoses

10.15 Leak test

After each 100 hours of engine operation, all flexible fluid hoses in the engine compartment should be checked for leaks as follows:
a. Examine the exterior of hoses for evidence of leakage or wetness.
b. Hoses found leaking should be replaced.
c. Refer to paragraph 10.11. for detailed inspection procedures for flexible hoses.

10.16 Replacement

a. Hoses should not be twisted on installation. Pressure applied to a twisted hose may cause failure or loosening of the nut.

b. Provide as large a bend radius as possible.
c. Hoses should have a minimum of one-half inch clearance from other lines, ducts, hoses or surrounding objects or be butterfly clamped to them.
d. Rubber hoses will take a permanent set during extended use in service.
e. Straightening a hose with a bend having a permanent set will result in the hose cracking. Care should be taken during removal so that the hose is not bent excessively, and during reinstallation to assure the hose is returned to its original position.

10.17 Static run-up procedure

In a case of suspected low engine power, a static RPM run-up should be conducted as follows:

a. Run-up engine, using take-off power, with the aircraft facing 90° right of the wind direction and then repeat the run-up with the aircraft pointing into the wind direction.
b. Record the RPM obtained in each run-up position.

Note	Daily changes in atmospheric pressure, temperature and humidity will have a slight effect on static run-up.

c. Average the result of the RPM obtained. At all models it should be within 100 RPM of 5000 RPM.

d. If the average results of the RPM obtained are lower than stated above, the following recommended checks may be performed to determine a possible deficiency:
   1. Check carburetor heat control for proper rigging. If partially open it would cause a slight power loss.
   2. Check choke control for proper rigging.
   3. Check spark plugs and ignition system for settings and conditions.
   4. Check both magnetos are working properly.
   5. Check condition of induction air filter. Clean if necessary.
   6. Perform an engine compression check. (Refer to engine Manufacturer's Manual.)

10.18 Engine mount (refer to figure 10-2.)

The engine mount is composed of sections of tubing welded together and reinforced with welded gussets. The purpose of the engine mount, is to support the engine and attach the engine to the airframe. The engine is attached to the mount with Screws and the mount is attached to the airframe through shockmount assemblies which absorb the engine vibrations.

10.19 Removal and installation

10.19.1 Required Tools: 8 mm allen wrench
10.19.2 Parts required: Loctite 243
10.19.3 Level of Maintenance: **Heavy**
10.19.4 Certification required: **A&P Mechanic / LSA Repairman Maintencance**

Removal of the engine mount requires the removal of the engine, followed by removal of the bolts attaching the engine to the mount. The engine and engine mount may be removed from the aircraft and then engine can be removed from the mount. Refer to paragraph 10.13. for detailed information.

10.20 Repair

Perform engine mount repair as outlined in Section 18. The mount should be painted with a heat-resistant grey enamel after welding or whenever the original finish has been removed or degraded.

10.21 Shock-mount pads

The rubber shock-mounts are designed to reduce transmission of the engine vibrations to the airframe. The rubber parts should be wiped with a clean dry cloth. Inspect rubber parts for swelling, cracking, or pronounced set of the part. Replace all parts that show evidence of wear or damage.

10.22 Engine oil system

The Rotax 912 series engine is provided with a dry sump forced lubrication system with a main oil pump, a integrated pressure regulator and oil pressure sensor. The oil pump is driven by the camshaft. The oil pump sucks the motor oil from the oil tank via the oil cooler and forces it through the oil filter to the points of lubrication in the engine. The surplus oil emerging from the points of lubrication accumulates on the bottom of the crankcase and is forced back to the oil tank by the blow-by gases. A vent line on the oil tank provides venting for the circuit. An oil temperature sensor is used for reading of the oil inlet temperature and is located on the oil pump housing. Refer also to the Engine Operators Manual for detailed information.

10.23 Trouble shooting

The following listing should be understood as quick reference guide to locate particular trouble which may occur to the engine oil system. For detailed information refer to the engine manufacturers Maintenance manual.

Trouble	Probable Cause	Remedy
No oil pressure.	No oil in system.	Fill system with proper grade and quantity of oil. Refer to Section 1.
	Oil pressure line broken, disconnected or pinched.	Replace or connect.
	Oil pressure line broken, disconnected or pinched.	Replace or connect.
	Defective oil pressure sensor.	Replace oil pressure sensor.
	Wiring of oil pressure sensor broken or disconnected.	Connect or repair wiring.
	Oil pump defective.	Remove and inspect in accordance with the Rotax Maintenance Manual.
Low oil pressure.	Defective oil pressure sensor.	Replace oil pressure sensor.
	Defective oil pressure gauge.	Replace or repair EIS system
	Low viscosity oil.	Drain oil and refill with proper grade and quantity of oil.
	Oil pump defective.	Remove and inspect in accordance with the Rotax Maintenance Manual.
	Oil pump suction tube screen plugged or internal oil leak.	Engine overhaul required.
	Secondary result of high oil temperature.	Observe oil temperature gauge for high indication. Determine and correct reason for high oil temperature.

	Oil system not bled correctly.	Bleed oil system in accordance with Rotax Maintenance Manual.
	Oil filter element not tight.	Tighten oil filter in accordance with Rotax Operators Manual.
High oil pressure.	Defective oil pressure sensor.	Replace oil pressure sensor.
	Defective oil pressure gauge.	Replace or repair EIS system
	High viscosity oil.	Drain oil and refill with proper grade and quantity of oil
Low oil temperature.	Defective oil temperature sensor	Replace oil temperature sensor.
	Defective oil temperature gauge	Replace or repair EIS system
High oil temperature.	Excessive rate of climb.	Avoid low airspeed.
	Closed oil cooler flap.	Move flap to "open" position.
	Defective oil temperature sensor.	Replace oil temperature sensor.
	Defective oil temperature gauge.	Replace or Repair Rotax Flydat.
	Low oil supply.	Refer to Rotax Maintenance Manual.
	Oil viscosity too high. Dirty oil.	Drain oil and refill with proper grade and quantity of oil.
	Prolonged high speed operation on the ground.	Hold ground running above 2500 rpm to a minimum.

10.24 Oil change with filter element removal and installation

10.24.1 Required Tools: screwdriver, edge cutter.
10.24.2 Parts required: New filter element, cable ties
10.24.3 Level of Maintenance: **Light**
10.24.4 Certification required: **Rotax-certified technician**

a. Remove the engine cowling as necessary for access.
b. Unscrew the oil filter from the oil pump at the front of the engine. The oil will drain from oil filter as it is removed from the engine.
c. Inspect the engine gasket seals for gouges, deep scratches, wrench marks, and mutilation.
d. Lubricate the gasket of the new filter and screw to the engine, do not overtighten filter element.
e. Re-install the parts removed for access, and service the engine with proper grade and quantity of engine oil (i.e., drain the oil tank, add oil to the tank to the proper level -- do NOT rotate the prop at any point during the oil and filter change procedure).
f. Start the engine and check for proper oil pressure. Check for oil leaks after warming up the engine. Check for proper oil level in the oil tank, and add oil if necessary.
g. Again check for oil leakage after the engine has been run at a high power setting (preferably following a flight around the field).

Note	Before discarding the removed filter element, cut the outer skin and check inside for evidence of internal engine damage such as chips or particles from bearings. In new or newly overhauled engines, some small particles or metallic shavings might be found, these are generally of no consequence and should not be confused with particles produced by impacting, abrasion, or pressure. Evidence of internal engine damage found in the oil filter element justifies further examination to determine the cause.

Note	When installing a new filter element, it is important that the gasket is clean, lubricated and positioned properly, and that the correct amount of torque is applied to the filter. If the filter is under-torqued, oil leakage will occur. If the filter is over-torqued, the filter can possibly be deformed, again causing oil leakage. Lubricate rubber gasket of new filter element with clean engine oil. A dry gasket can cause a false torque value, again resulting in oil leakage.

10.25 Engine fuel system

The engine is equipped with two carburetors mounted at the upper side of the engine. The carburetors are of the constant velocity type, installed to each manifold of the engine. For overhaul and repair of the carburetors refer to the manufacturer´s maintenance and repair manual.

10.26 Carburetor removal and installation

10.26.1 Required Tools: Head screwdriver, 8/10/13 mm wrench, 13 mm socket wrench.
10.26.2 Parts required: Self-locking nut (M6), cable ties, lock screw.
10.26.3 Level of Maintenance: **Light**
10.26.4 Certification required: **Rotax-certified technician**

a. Place the fuel shut-off valve in the OFF position.
b. Remove the engine cowling.
c. Disconnect flexible hose from the intake
d. Remove the airbox
e. Disconnect the throttle and choke controls from arms on the carburetor. Note the EXACT position and size of bushings for reference on reinstallation.
f. Disconnect and plug the fuel and air lines at the carburetors.
g. Loosen bolts and clamps attaching the carburetor to the intake manifold. Remove the carburetors.
h. Reverse the preceding steps for reinstallation.
i. Rig the controls in accordance with applicable paragraph in this section.
j. Check the carburetor throttle arm to the idle stop arm attachment for security and proper safety at each normal engine inspection.

10.27 Idle speed adjustment

10.27.1 Required Tools: Screwdriver
10.27.2 Parts required: Lock screw

10.27.3 Level of Maintenance: **Light**
10.27.4 Certification required: **Rotax-certified technician**

Note	Idle speed adjustment should be accomplished after the engine has been warmed up. Engine idle speed may vary among different engines. An engine should idle smoothly, without excessive vibration, and the idle speed should be high enough to maintain idling oil pressure and to preclude any possibility of engine stoppage in flight when the throttle is closed.

a. Set the throttle stop screws to obtain between 1500 and 1800 rpm, with the throttle control pulled full out against the idle stop.
b. Check that both the idle stop screws contact its idle stop brackets at the same time and readjust if necessary.
c. Apply laquer to each idle stop screw to ensure properly and safe security.

10.28 Carburetor synchronizing

Synchronizing the carburetors is essential to achieve smooth engine operation, free from vibrations. Refer to Rotax Maintenance manual for advisory about correct synchronization of carburetors.

10.29 Induction air system

Ram air enters the engine via the induction airbox through an opening in the front part of the upper engine nose cowling. The air is filtered through a filter which is located in the inlet of the airbox. From the induction airbox the filtered air is directed to the inlet of each carburetor, mounted on the upper side of the engine, and through the carburetor, where fuel is mixed with the air, to the intake manifold. From the intake manifold, the fuel-air mixture is distributed to each cylinder by separate intake pipes. The intake pipes are attached to the cylinders with a two bolt flange which is sealed with a gasket. A distributor box on the air intake contains a valve, operated by a carb heat control in the cabin, which permits air from an exhaust heated source to be selected in the event carburetor icing or if filter icing should be encountered.

10.30 Removal and installation

Remove and install airbox system as outlined in paragraph 10.26

10.31 Ignition system

The Rotax 912 series engines are equipped with a dual ignition unit of a breakerless capacitor discharge design, with an integrated generator. The ignition unit is completely free of maintenance and needs no external power supply. Two independent charging coils located on the generator stator supply one ignition circuit each. The energy is stored in capacitors of the electronic modules. At the moment of ignition 2 of the 4 external trigger coils actuate the discharge of the capacitors via the primary circuit of the dual ignition coils.

Note	The 5th trigger coil is used for revolution counter signal.

10.32 Magneto removal and installation

Magnetos are located at the rear side of the engine. To replace them it is necessary to remove the induction airbox first (refer to paragraph 10.26). After removing the protection cover at the rear of the engine, access to the magnetos is available. Replace the magnetos in accordance with the Rotax maintenance manual. For re-installation, reconnect all items removed for access to the magnetos.

10.33 Magneto check

Because the whole ignition system is designed to need no servicing, it is not possible to adjust the timing of the ignition system. Therefore checking proper operation of the system is reduced to the drop in engine speed at specified rpm while alternating between the operation of each magneto separately.

a. Start and run engine until the oil and cylinder head temperatures are in the normal operating ranges.
b. Advance engine speed to 3850 rpm.
c. Turn the ignition switch to the “R” position and note the rpm drop, then return the switch to the “BOTH” position to clear the opposite set of plugs.
d. Turn the switch to the “L” position and note the rpm drop, then return the switch to the “BOTH” position.
e. The rpm drop should not exceed 300 rpm on either magneto.

For more detailed information refer to the engine manufacturer´s maintenance manual.

10.34 Spark plugs

Two spark plugs are installed into each cylinder. The spark plugs are shielded to prevent spark plug noise in the radio and the spark plugs have an internal resistor to provide longer terminal life. Spark plug life will vary with operating conditions. A spark plug that is kept clean and properly gapped will give a better and longer service than one that is allowed to collect lead deposits and is improperly gapped. The correct spark plug and gap setting is given in paragraph 10.1.

Note	At each 100-hour inspection, remove, clean, inspect, and regap all spark plugs. At re-installation of the plugs during a 100-hour check, alternate the lower spark plugs with the upper spark plugs on each cylinder. Since deterioration of lower spark plugs is usually more rapid than that of the upper spark plugs, rotating them helps prolong spark plug life. Follow all Rotax spark plug installaton instructions, including using the proper "heat sink paste" on the spark plug threads (with care to not allow any of the heat sink past to get on or near the spark plug electrode).

10.35 Engine controls

Engine controls designed of the conventional push-pull type include the throttle, choke and carburetor heat controls. The engine controls are equipped with position-locking devices which prevent vibration-induced “creeping” of the controls.

Figure 10-4 (tricycle gear panel shown in photo – taildraggers have toe brakes)

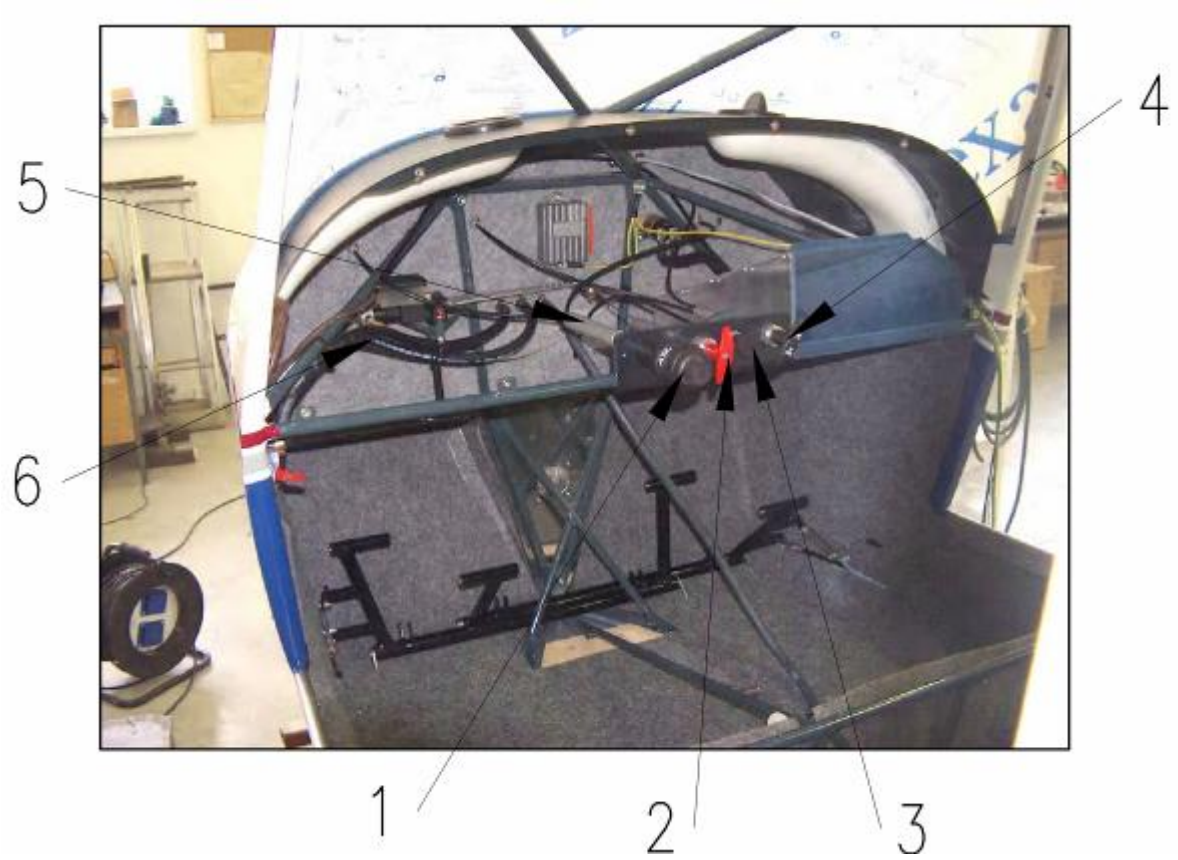

1. Throttle knob
2. Brake and parking brake
3. Carburetor heat lever
4. Chock control lever
5. Mixer control for the carburetors
6. Fuel hoses

10.36 Rigging

When adjusting any engine control, it is important to check that the control slides smoothly throughout its full range of travel, that it locks securely if equipped with a locking device, and that the arm or lever which the control operates moves through its full arc of travel.

Caution	Whenever engine controls are being disconnected, pay particular attention to the exact position, size, and number of attaching washers, spacers or bushings. Be sure to re-install the parts as noted when reconnecting controls.

10.37 Throttle control

10.37.1 Required Tools: 8 & 10 mm open-end wrench
10.37.2 Parts required: Lock screw
10.37.3 Level of Maintenance: **Light**
10.37.4 Certification required: **A&P Mechanic or LSA Repairman Maintenance**

Note	Before rigging the throttle control ensure that the control cables are in good condition.

a. Push the throttle to the full throttle position and check that both the actuator arms on the carburetor achieve its maximum position.
b. Adjust the locknut at the carburetor end of the control as required to achieve the maximum travel of each actuator lever.
c. Pull the throttle control to the idle position.
d. Check that both the idle stop screws contact its idle lock and adjust if required.
e. Check the idle speed in accordance with paragraph 10.27.
f. Check carburetor synchronizing in accordance with paragraph 10.28.
g. Tighten the rod end locknuts at carburetor end of control. Be sure to maintain sufficient thread engagement between the rod end and the control.

Note	Refer to the inspection chart in Section 2 for inspection and / or replacement interval for the throttle control.

10.38 Choke control

Note	Before rigging the choke control ensure that the control cables are in good condition.

a. Push the choke control to the off-position.
b. Check the cable tension for proper setting at the carburetor end of control, adjust if required (choke arms on each carburetor must touch to its locks in the off position).
c. Pull the choke control to on-position.
d. Check that both arms on the carburetor achieve their maximum travel at the same time. If required readjust controls at the locknut on carburetor arm.
e. Tighten the rod end locknuts at the carburetor end of the control. Be sure to maintain sufficient thread engagement between the rod end and the control.

Note	Refer to the inspection chart in Section 2 for inspection and / or replacement interval for the choke control.

10.39 Carburetor heat control

Note	Before rigging the carburetor heat controls ensure that the control cable is in good condition.

a. Push the carburetor heat control to off-position.
b. Check the cable tension for proper setting at the end of the control, adjust if required (the carburetor heat arm must touch its locks in the off position).
c. Pull the carburetor heat control to on-position.
d. Check that both the arms on the carburetor heat achieve their maximum travel. If required readjust the controls at the locknut on the carburetor heat arm.

10.40 Starting system

The automatically engaged starting system employs an electric starter motor mounted at the rear of the engine housing. A starter solenoid is activated by turning the master key to the on position and pushing starter button on the instrument panel. When the solenoid is activated, the contacts close and electrical current energizes the starter motor. For activating the ignition system, both the ingnition switches are required to be in the on position.

10.41 Trouble shooting

Trouble	Probable Cause	Remedy
Starter will not operate.	Defective master switch or circuit.	Install new switch or wires.
	Defective starter switch or switch circuit.	Install new switch or wires.
	Defective starter motor.	Remove, repair or install new starter motor.
Starter motor runs, but does not turn crankshaft.	Starter motor shaft broken.	Install a new starter motor.
Starter motor drags.	Low battery.	Charge or install a newmbattery.
	Starter switch or relay contacts burned or dirty.	Install serviceable unit.
	Defective starter motor power cable	Install new cable.
	Loose or dirty connections.	Remove, clean and tighten all terminal connections.
	Defective starter motor.	Repair or install a new starter motor

10.42 Removal and installation

10.42.1 Required Tools: Screwdriver, 10 mm wrench.
10.42.2 Parts required: Self-locking nut (M6), insulating tape.
10.42.3 Level of Maintenance: **Light**
10.42.4 Certification required: **Rotax-certified technician**

a. Remove the cowling as required for access.
b. Disconnect the starter power cable at the starter. Insulate the terminal on the power cable to prevent accidental shorting.
c. Remove the carburetor from the right side of the engine and remove necessary equipment in this area to enable the removal of the retaining bolts, detach the starter from the crankcase.
d. Withdraw the starter motor from the engine housing.
e. Reverse the preceding steps for reinstallation.
f. Torque the starter motor retaining bolts to a torque value in accordance to the Rotax maintenance manual.

10.43 Exhaust system

The exhaust system consists of a muffler with an exhaust pipe from each cylinder to the muffler. The muffler assemblies are enclosed in shrouds which capture the ram air to be heated by the exhaust gases in the muffler. This heated air is used to heat the aircraft cabin. A tail pipe from the muffler routes exhaust gases outboard through the lower cowling. The complete exhaust system is manufactured from stainless steel.

10-44 Removal

10.44.1 Required Tools: Screwdriver, gripper, 12 & 13 mm wrench
10.44.2 Parts required: Heat resistant silicone, 8 x self-locking copper nut (M8).
10.44.3 Level of Maintenance: **Light**
10.44.4 Certification required: **A&P Mechanic or LSA Repairman Maintenance**

a. Remove the engine cowling as required for access.
b. Disconnect the flexible hose from the heater shell on the muffler assembly.
c. Remove the nuts securing the downpipes to the cylinders.
d. Disengage the retaining springs from the muffler then remove the muffler.
e. Carefully remove the downpipes and unscrew exhaust probes from each of the downpipes.

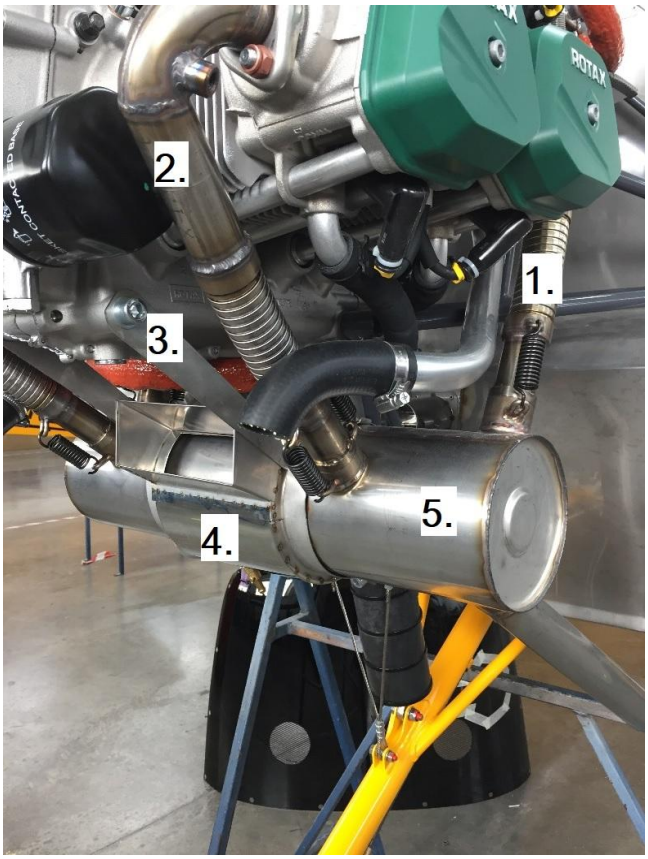

Figure 10-5

1. 2x rear exhaust pipe
2. 2x front exhaust pipe
3. muffler bracket
4. muffler shroud for cockpit heating
5. muffler

10.45 Inspection

Inspection of the exhaust system must be very thorough because the cabin heating system uses air heated by the heat exchangers of the exhaust system. Since exhaust system of this type are subject to burning, cracking, and general deterioration from alternate thermal stresses and vibration, inspection is very important and should be accomplished every 100-hour of operation. In addition, an inspection of the exhaust system should be performed anytime exhaust fumes are detected in the cabin area.

a. Remove the engine cowling, and remove the muffler and heater shell so that ALL surfaces of the exhaust system can be visually inspected. Especially check areas adjacent to welds. Look for exhaust gas deposits in surrounding areas, indicating that exhaust gas is escaping through a crack or hole.

b. For a more thorough inspection, or if fumes have been detected in the cabin, the following inspection is recommended.

1. Remove the exhaust pipe and mufflers.
2. Use a rubber expansion plugs to seal openings.
3. Using a manometer or gauge, apply approximately 1-1/2 psi air pressure while the mufflers and each exhaust pipe is submerged in water. All leaks will appear as bubbles and can be easily detected.

c. It is recommended that any exhaust pipe or muffler found defective be replaced with a new part before the next flight.

10.46 Extreme weather maintenance

10.47 Cold weather

Generally, an engine service should be carried out before the start of the cold season. For selection of coolant and mixing ratio refer to the Rotax operator manual. For selection of oil refer to Section 1. **For coolant information, refer to note #10 on Inspection Checklist.**

Start the engine with the throttle closed and choke activated (open throttle renders starting carb ineffective). As performance of electric starter is greatly reduced when cold, limit starting attempts to periods not longer than 10 seconds and with a well charged battery (adding a second battery will not improve cold starts).

10.48 Hot weather

Engine mis-starts characterized by weak, intermittent explosions followed by puffs of black smoke from the exhaust are caused by flooding. This situation is more apt to develop in hot weather or when the engine is hot.

Caution	Never operate the starting motor more that 10 seconds at a time. Allow the starter motor to cool between cranking periods to avoid shortening the life of the starter.

10.49 Dusty conditions

Dust particles in the intake system of the engine is probably the greatest single cause of early engine wear. When operating under high dust conditions, the induction air filter should be serviced daily as outlined in paragraph 2.16.

10.50 Sea coast and humid areas

In salt water areas, special care should be taken to keep the engine and accessories clean to prevent oxidation. In humid areas, fuel and oil should be checked frequently and drained of condensed moisture. Hardware (bolts and nuts) should be periodically treated with a good corrosion-preventative (such as ACF-50 or other good products).

BRP-Powertrain

MAINTENANCE MANUAL

1) Scheduled maintenance checks

Definition

This section lists the periodic inspections which must be carried out after a specified period of operation.

Intervals

Periodic inspections are those which must be performed at 50, 100, 200, 600 hr. intervals in accordance with chap. 05-20-00. section: 5.1).

This means for example that **every 100** hr. of operation a 100 hr. check and all 200 hr. additional checks as per maintenance check list must be carried out.

	Intervals - hours									
	25 hr	100 hr	200 hr	300 hr	400 hr	500 hr	600 hr	700 hr	to	2000 hr
100 hr	X	X	X	X	X	X	X	X		X
200 hr			X		X		X			
600 hr							X			

100 hr. check

- In order to demonstrate continued airworthiness, an engine must be inspected after every 100 hours of operation.
- For the intervals between maintenance work, a tolerance of ±10 hr. is permissible, but these tolerances must not be exceeded. This means that if a 100 hr. check is actually carried out at 110 hr., the next check will be due at 200 hr. ±10 hr. and not at 210 hr. ±10 hr.
- If maintenance is performed before the prescribed interval, the next maintenance check is to be done at the same interval (e.g. if first 100 hr. check is done after 87 hours of operation, the next 100 hr. check must be carried out after 187 hours of operation).

Special hr. check

NOTES: This maintenance schedule contains a column for a 50 hr. check. This check is recommended by the manufacturer but not essential, with the exception of oil change when operating with leaded AVGAS.

25-hr. check

- In order to demonstrate continued airworthiness, an engine must be inspected after the first 25 hours of operation.
- The checks performed at the 25 hr. inspection are the same as for the 100 hr. inspection. This applies both to newly delivered engines and to overhauled engines.

Section 10A - supplementary section for 914UL engine installations

ENGINE

This section includes some information for the standard Rotax 912ULS engine and also information for the optional Rotax 914UL turbo-charged engine. The Rotax 914UL engine is a sophisticated engine and our aircraft are delivered with the Rotax 914 Operators Manual with a great deal of essential information for operation and maintenance.

For 914UL service and maintenance, this must only be performed by a properly qualified and certified Rotax technician, in accordance with the Rotax 914UL maintenance manuals, which are always available at no cost on the Rotax web site at... www.rotax-owner.com

The Rotax technician must have on hand and follow all instructions and information provided in the Rotax 914 Operators Manual, the Rotax 914 Line Maintenance Manual, and (where applicable) in the Rotax 914 Heavy Maintenance Manual.

Table of contents (for 914UL supplementary section) **Page**

10.1 Engine cowling

The engine cowling is comprised of an upper and lower cowl segment. Quick-release screw fasteners are used at the cowling to fuselage attachment points fixing the cowling to the firewall. Quick-release screws are also used along the side surfaces to hold lower cowling and upper cowling segments together. Both cowl segments are constructed from carbon fiber composites.

10.2 Removal and installation

11.2.1 Required Tools: Screwdriver
11.2.2 Parts required: None
11.2.3 Level of Maintenance: **Light**
11.2.4 Certification required: **Owner**

Removal and installation of engine cowling is accomplished by initially releasing the quick-release fasteners at the side surfaces. Then, remove the upper cowling by disengaging it from top of the fire wall, then lifting the upper cowling away from the lower cowling from the front of the aircraft. Disconnect the Carburetor heater controls (see figure 10-1, N. 1), the orange air intake tube (N. 2), the oil cooler connections (N. 3), release the oil cooler but do not disconnected oil hoses, and disconnect the water cooler holder (N. 5, 6)

Loosen the quick-release screws of the lower cowling segment (N.8) and remove from the front of the aircraft. Take care to disconnect the electrical wiring to the landing light in lower cowling (if installed N.7) when removing the lower cowling.

When reinstalling the cowlings – reverse the above process.

Figure 10-1 - Rotax 914UL engine

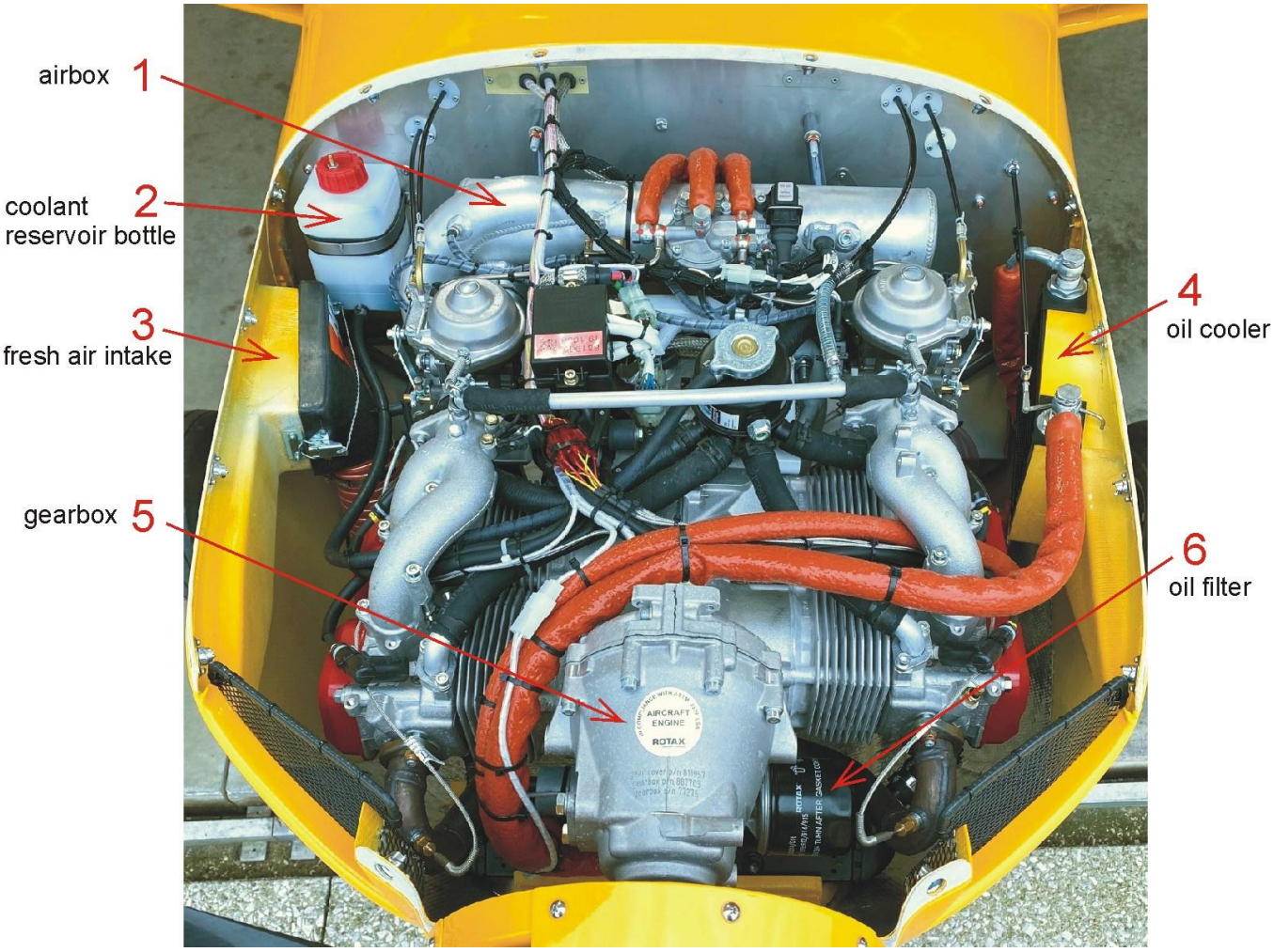

10.3 Cleaning and inspection

Wipe the inner surfaces of the cowling segments with a cloth saturated with cleaning solvent. If the inside surface of the cowling is coated heavily with oil and dirt, allow solvent to soak until the foreign material can be removed. Wash painted surfaces of the cowling with a solution of mild soap and water and rinse thoroughly. After washing, it is recommended to apply a coat of wax to the painted surface to prolong paint life. After cleaning, inspect the cowling for cracks. Repair all defects to prevent spread of any damage.

10.4 Repair

11.4.1 Required Tools:	As required
11.4.2 Parts required:	Epoxy Resin, carbon fiber tape, fabrics.
11.4.3 Level of Maintenance:	**Heavy**
11.4.4 Certification required:	**A&P Mechanic or LSA Repairman Maintenance**

If cowling skins are extensively damaged, new complete sections of the cowling should be installed. If cracks are detected in the carbon fiber cowl segments, they may be repaired using L285 Epoxy Resin or similar (R&G L20), reinforcing with suitable carbon fiber fabrics. Follow the instructions on the container for a successful completion of the repair.

10.5 Engine - the 914UL engine

The Rotax 914 series engines are 4-stroke, 4 cylinder horizontally opposed, spark ignition engines with turbocharger and electronic control of boost pressure (TCU = turbocharger control unit), one central camshaft with push rods and OHV (overhead valves). Cylinder heads are liquid cooled. Lubrication system is a dry sump forced type. It is equipped with dual breakerless capacitor discharge ignition and two constant velocity carburetors. Prop drive is via reduction gear with integrated shock absorber and overload clutch. Specific engine datas are given in figure 11-2.

10.6 Engine data - for 912ULS and 914UL engines (refer to 914UL manuals for details)

Figure 10-2

Descriptions	**912 ULS**	**914UL**
Dimensions		
Bore	3.31 in	3.13 in.
Stroke	2.40 in	2.40 in.
Displacement	82.5 cu.in	73.9 cu.in.
Compression ratio	11 :1	9.0 : 1
Weight (without exhaust, radiator, air intake system)	134 lb	
Speed		
Takeoff engine rpm (maximum)	5800 rpm	5800 rpm (max 5 minutes)
Continuous engine rpm (maximum)	5500 rpm	5500 rpm
Idle speed (range - preferably appox. 1550 rpm)	1450 - 1650 rpm	1450 - 1650 rpm
Gear ratio	2.43 :1	
Performance		
Takeoff performance at 5800 rpm (max 5 min)	100 hp	84.5 kW / 115 hp
Continuous performance at 5500 rpm	92 hp	73.5 kW / 100 hp
Acceleration Max. negative "g" for 5 seconds	-0.5	
Manifold pressure:		
Take-off performance	n/a	39.0 in.HG
Max continuous performance	n/a	34.9 in.HG
EGT (Exhaust Gas Temperature) maximum	1742° F	1742° F
Oil pressure		
Max. for short period at cold start	100 psi	102 psi
Min. (below 3500 rpm)	12 psi	12 psi
Normal (above 3500 rpm)	29 - 73 psi	29 - 73 psi
Deviation from max bank angle	40°	40°
Oil temperature		
Max	266° F	266° F
Min	120° F	120° F
Normal	190-230° F	190-230° F
Coolant temperature		
Max	248° F	248° F
Normal	167-230° F	167-230° F
Engine start, operating temperature		
Max	120° F	120° F
Min	-13° F	-13° F
Fuel pressure: Max	5.8 psi	5.8 psi
Min	2.2 psi	2.2 psi
Electric starter	12V, 0.6 kw	12V, 0.7 kw
Generator	12V, 20A	12V, 20A
Spark plugs	NGK DCPR8E	ND X27EPR-U9
Spark plug gap	0.027 in	0.027 in
Spark plug torque	176 in/lb	176 in/lb

10.7 Trouble shooting

Refer to Rotax 914-series Operator and Maintenance Manuals, latest issues. It must be understood that the table below should only be seen as a general guide for locating causes of engine failures.

Trouble	Probable Cause	Remedy
Engine will not start.	Fuel tank empty.	Fill with proper grade of gasoline.
	Improper use of starting procedure.	Review starting procedure.
	Fuel shut-off valve closed.	Turn shut-off valve ON.
	Tank screen, or fuel lines plugged.	Remove and clean thoroughly. Remove moisture.
	Engine flooded.	Refer to paragraph 10.50.
	Defective ignition system.	Refer to paragraph 10.32.
	Excessive induction air leaks.	Correct the cause of leaks.
	Defective magneto switch or grounded magneto leads.	Check continuity. Repair or replace switch or wiring.
	Defective carburetor.	Repair or replace carburetor.
	Spark plugs fouled or improperly gapped.	Remove and clean: Check gaps and insulators. Check cables to persistently fouled plugs. Replace defective plugs.
	Defective magnetos or ignition amplifiers.	Replace defective parts in accordance with Rotax maintenance manual.
	Spark plugs loose.	Tighten to specified torque.
	Water in fuel system.	Drain fuel tank sump, fuel lines and carburetors.
	Excessive starter slippage.	Replace starter motor.
Engine will not run at idling speed.	Idle speed incorrectly adjusted.	Refer to paragraph 10.27.
	Carburetor idling jet plugged.	Clean carburetor.
	Air leak in intake manifold.	Tighten loose connections or replace damaged parts.
	Spark plugs fouled by oil escaping past piston rings.	Top overhaul engine.
Rough idling.	Idle speed incorrectly adjusted.	Refer to paragraph 10.27.
	Fouled spark plugs.	Remove and clean, adjust gaps. Test harness cables. If persistent perform top overhaul.
	Small air leak into induction system.	Tighten connections or replace damaged parts.
	Defective engine.	Check compression and listen for unusual engine noises. Engine repair is required.

Engine does not accelerate properly.	Cold engine.	Warm up longer.
	Restriction in carburetor air intake.	Remove restriction and clean filter.
	Restriction in carburetor jets, low float level.	Clean and repair carburetor.
	Incorrect carburetor synchronizing.	Synchronize carburetors in accordance to Rotax maintenance manual.
	Incorrect idle setting.	Refer to paragraph 10.27.
Engine does not shut off with ignition key in off position.	Broken wiring or defective magneto switch.	Repair wiring or replace magneto switch.
Engine runs rough at high speed.	Loose mounting bolts or rubber pads defective.	Tighten bolts or replace mounting pads.
	Propeller out of balance.	Remove and balance.
	Spark plug gap too large or insulator damaged.	Replace damaged parts.
	Ignition cable insulation damaged.	Test for leakage at high voltage and replace damaged ignition lead.
	Float chamber bleed hoses disconnected or broken.	Connect or replace bleed hoses.
Sluggish operation and low power.	Throttle not opening completely.	Rig per paragraph 10.37.
	Spark plugs fouled or improperly gapped.	Remove, clean and regap or install new plugs.
	Incorrect carburetor synchronizing.	Synchronize carburetors in accordance to Rotax maintenance manual.
	Incorrect carburetor mixture setting.	Adjust carburetors in accordance with Rotax maintenance manual.
High cylinder head temperature.	Low grade fuel.	Drain and fill with correct grade of fuel. Refer to Section 2.
	Excessive carbon deposits in cylinder head and on pistons.	Install new cylinders and piston rings or new engine.
	Low water level in cooling system.	Refill with suitable coolant and check for leaks.
	Dirt between cylinder fins.	Clean thoroughly.
High oil temperature.	Low oil supply.	Replenish.
	Oil viscosity too high.	Refer to section 2 for seasonal grades.
	Oil regulator flap closed.	Set oil regulator flap to open position.
	Prolonged high speed operation on ground.	Hold ground running above 2500 rpm to a minimum.
Low oil pressure.	Low oil supply.	Replenish.

	Oil viscosity too low.	Drain and refill with correct seasonal grade. Refer to Section 2.
	Foam in oil due to emulsification of alkaline solids.	Drain and refill with fresh oil. Refer to Section 2 for seasonal grade.
	Defective pressure sensor.	Replace pressure sensor.
	Oil pump defective.	Remove and inspect. Examine engine. Metal particles from damaged pump may have entered engine oil passages.
	Oil pressure line broken, disconnected or pinched.	Inspect, replace or connect line.
	Internal leak, burned bearings, or damaged gasket.	Major overhaul.
Oil leak at propeller shaft.	Damaged propeller driveshaft seal.	Replace in accordance with Rotax maintenance manual.
Low compression.	Cylinder wall-coating worn.	Replace cylinder and rings.
	Intake valves guides worn.	Top overhaul.
	Valves seats and faces worn.	Top overhaul.
	Piston rings excessively worn.	Top overhaul.
	Valves sticking in guides.	Top overhaul.

10.8 Removal - Refer to Section 10 in main Maintenance Manual for general information and guidance. However, for the Rotax 914UL engine, the technician must refer and be guided by the Rotax 914 Operators Manual and Rotax 914 Line Maintenance Manual and Rotax 914 Heavy Maintenance Manual.

10.9 Cleaning - refer to this section in main Maintenance Manual

10.10 Accessories removal - refer to this section in main Maintenance Manual

10.11 Inspection - refer to this section in main Maintenance Manual plus all relevant information in the Rotax 914 engine manuals

10.12 Engine build-up - refer to this section in main Maintenance Manual plus all relevant information in the Rotax 914 engine manuals

10.13 Installation - refer to this section in main Maintenance Manual plus all relevant information in the Rotax 914 engine manuals

10.14 Flexible fluid hoses - refer to this section in main Maintenance Manual plus all relevant information in the Rotax 914 engine manuals

10.15 Leak test - refer to this section in main Maintenance Manual plus all relevant information in the Rotax 914 engine manuals

10.16 Replacement - refer to this section in main Maintenance Manual plus all relevant information in the Rotax 914 engine manuals

10.17 Static run-up procedure - refer to this section in main Maintenance Manual plus all relevant information in the Rotax 914 engine manuals

10.18 Engine mount - refer to this section in main Maintenance Manual plus all relevant information in the Rotax 914 engine manuals

10.19 Removal and installation - refer to this section in main Maintenance Manual plus all relevant information in the Rotax 914 engine manuals

10.20 Repair - refer to this section in main Maintenance Manual plus all relevant information in the Rotax 914 engine manuals

10.21 Shock-mount pads - refer to this section in main Maintenance Manual plus all relevant information in the Rotax 914 engine manuals

10.22 Engine oil system - refer to this section in main Maintenance Manual plus all relevant information in the Rotax 914 engine manuals

10.23 Trouble shooting - refer to this section in main Maintenance Manual plus all relevant information in the Rotax 914 engine manuals

10.24 Oil change with filter element removal and installation - refer to this section in main Maintenance Manual plus all relevant information in the Rotax 914 engine manuals

10.25 Engine fuel system - refer to this section in main Maintenance Manual plus all relevant information in the Rotax 914 engine manuals

10.26 Carburetor removal and installation - refer to this section in main Maintenance Manual plus all relevant information in the Rotax 914 engine manuals

10.27 Idle speed adjustment - refer to this section in main Maintenance Manual plus all relevant information in the Rotax 914 engine manuals

10.28 Carburetor synchronizing - refer to this section in main Maintenance Manual plus all relevant information in the Rotax 914 engine manuals

10.29 Induction air system - refer to this section in main Maintenance Manual plus all relevant information in the Rotax 914 engine manuals

10.30 Removal and installation - refer to this section in main Maintenance Manual plus all relevant information in the Rotax 914 engine manuals

10.31 Ignition system - refer to this section in main Maintenance Manual plus all relevant information in the Rotax 914 engine manuals

10.32 Magneto removal and installation - refer to this section in main Maintenance Manual plus all relevant information in the Rotax 914 engine manuals

10.33 Magneto check - refer to this section in main Maintenance Manual plus all relevant information in the Rotax 914 engine manuals**.**

10.34 Spark plugs - refer to this section in main Maintenance Manual plus all relevant information in the Rotax 914 engine manuals

10.35 Engine controls - refer to this section in main Maintenance Manual plus all relevant information in the Rotax 914 engine manuals and information in the Aeropro CZ POH for aircraft with 914UL engine.

10.36 Rigging - refer to this section in main Maintenance Manual plus all relevant information in the Rotax 914 engine manuals

10.37 Throttle control - refer to this section in main Maintenance Manual plus all relevant information in the Rotax 914 engine manuals

10.38 Choke control - refer to this section in main Maintenance Manual plus all relevant information in the Rotax 914 engine manuals

10.39 Carburetor heat control - refer to this section in main Maintenance Manual plus all relevant information in the Rotax 914 engine manuals

10.40 Starting system - refer to this section in main Maintenance Manual plus all relevant information in the Rotax 914 engine manuals

10.41 Trouble shooting - refer to this section in main Maintenance Manual plus all relevant information in the Rotax 914 engine manuals

10.42 Removal and installation - refer to this section in main Maintenance Manual plus all relevant information in the Rotax 914 engine manuals

10.43 Exhaust system - refer to this section in main Maintenance Manual plus all relevant information in the Rotax 914 engine manuals

10-44 Removal - refer to this section in main Maintenance Manual plus all relevant information in the Rotax 914 engine manuals

10.45 Inspection - refer to this section in main Maintenance Manual plus all relevant information in the Rotax 914 engine manuals

10.46 Extreme weather maintenance - refer to this section in main Maintenance Manual plus all relevant information in the Rotax 914 engine manuals

10.47 Cold weather - refer to this section in main Maintenance Manual plus all relevant information in the Rotax 914 engine manuals

10.48 Hot weather - refer to this section in main Maintenance Manual plus all relevant information in the Rotax 914 engine manuals

10.49 Dusty conditions - refer to this section in main Maintenance Manual plus all relevant information in the Rotax 914 engine manuals

10.50 Sea coast and humid areas - refer to this section in main Maintenance Manual plus all relevant information in the Rotax 914 engine manuals

reprinted from Rotax 914 Series Line Maintenance Manual, Edition 2 / Rev. 0 dated January 01/2010
note: check latest version Rotax 914 Series Maintenance Manual for current information

1) Definition of terms

1.1) Operating hours

Definition

All of the maintenance intervals, such as the 100 hr. inspection and the engine TBO, relate to the number of operating hours of the engine.

The operating hours are defined as follows in order to prevent misunderstandings and to ensure safety:

- All time during which the engine is running is counted towards the total number of operating hours.
- The time is counted irrespective of the load factor of the engine, such as idling or take-off power.

NOTES: A mechanical hour meter is directly coupled to the engine speed, the readings may deviate considerably from those given by electronic remitters (e.g. TCU, FlyDat). Maintenance and overhaul intervals are always dictated by the readings of the electronic hour meter.

- The planned inspections to be performed at certain intervals are based on experience from long test runs and field observations. They are intended as precautionary maintenance measures in order to ensure continued trouble-free operation of the engine.

1.2) Time limit

Definition

Time limits are predetermined time spans and intervals which are based either on calendar intervals or the number of engine operating hours. Once the time limits have been reached, the affected parts must either be replaced for a general overhaul, or maintenance work must be performed. These precautionary maintenance measures are designed to avoid engine malfunctions or defects and ensure continued airworthiness of the engine.

1.3) Life cycle

Definition

The life cycle is always specified as an exact time span and is also quoted in flight hours.

NOTES: Parts with a limited life cycle must be taken out of operation and overhauled if the specified time span or number of flight hours is reached (whichever comes first).

d06133.fm

BRP-Powertrain

MAINTENANCE MANUAL

1) Scheduled maintenance checks

Definition

This section lists the periodic inspections which must be carried out after a specified period of operation.

Intervals

Periodic inspections are those which must be performed at 50, 100, 200, 600 hr. intervals in accordance with chap. 05-20-00. section: 5.1).

This means for example that **every 100** hr. of operation a 100 hr. check and all 200 hr. additional checks as per maintenance check list must be carried out.

	Intervals - hours									
	25 hr	100 hr	200 hr	300 hr	400 hr	500 hr	600 hr	700 hr	to	2000 hr
100 hr	X	X	X	X	X	X	X	X		X
200 hr			X		X		X			
600 hr							X			

100 hr. check

- In order to demonstrate continued airworthiness, an engine must be inspected after every 100 hours of operation.
- For the intervals between maintenance work, a tolerance of ±10 hr. is permissible, but these tolerances must not be exceeded. This means that if a 100 hr. check is actually carried out at 110 hr., the next check will be due at 200 hr. ±10 hr. and not at 210 hr. ±10 hr.
- If maintenance is performed before the prescribed interval, the next maintenance check is to be done at the same interval (e.g. if first 100 hr. check is done after 87 hours of operation, the next 100 hr. check must be carried out after 187 hours of operation).

Special hr. check

NOTES: This maintenance schedule contains a column for a 50 hr. check. This check is recommended by the manufacturer but not essential, with the exception of oil change when operating with leaded AVGAS.

25-hr. check

- In order to demonstrate continued airworthiness, an engine must be inspected after the first 25 hours of operation.
- The checks performed at the 25 hr. inspection are the same as for the 100 hr. inspection. This applies both to newly delivered engines and to overhauled engines.

d06134.fm

8) Checking the wastegate flap

General note

See Fig. 11.

NOTICE Damage to the bowden cable is not permissible. If only 1 flexible wire of the bowden cable is abraded, the cable must be replaced. See 78-00-00 of the Heavy Maintenance Manual.

Checks

The following checks must be carried out:

Step	Procedure
1	Check the bowden cable of the wastegate actuation (1) for mechanical damage or wear.
2	Check the bowden cable suspension and spring.
3	Check the adjustment of the wastegate flap. NOTES: When the engine has been shut down, the servo motor always runs to closed position. This also applies when the TCU is switched on. The servo motor moves approx. 1/2 revolution and then remains in closed position. In this position, the wastegate flap must be completely closed. If necessary, readjust using the adjusting screw (2). See 78-00-00 of the Heavy Maintenance Manual.
4	Check the wastegate lever (3) for free movement. NOTES: If it does not move freely, lubricate the axle (lubrication hole) of the wastegate with LOCTITE Anti-Seize 8151, ROTAX part no. 297434.

d06136.fm

BRP-Powertrain

MAINTENANCE MANUAL

Graphic

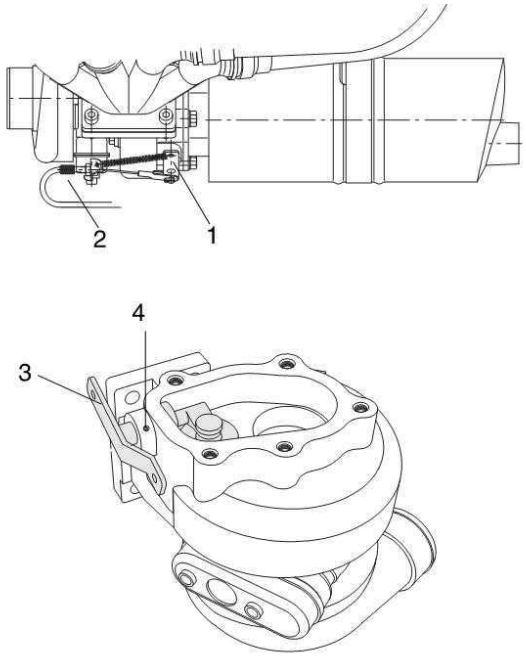

Part	Function
1	Wastegate actuation
2	Adjusting screw
3	Wastegate lever
4	Lubrication hole

Fig. 11 00147

d06136.fm

Section 11

Fuel system

Fuel system for standard 912ULS engine - for 914UL installations, see supplementary Section 11A

Table of contents **Page**

11.1 Fuel system

11.2 Description

The fuel is gravity-fed from the right-hand or left-hand wing tank into the header tank depending which wing tank fuel valve is open. The fuel is then further directed from the header tank via the main fuel valve and fuel filter into the mechanical fuel pump on the engine which delivers the fuel to the carburetors. The amount of fuel in the tank is indicated by a visual sight gauge which is a part of each tank. Minimum fuel quantity in the header tank is visually indicated by the lighting of a warning light on the instrument panel. The remaining fuel (i.e. 1 gallon) is normally sufficient enough for 15 minutes of flight (at moderate power settings). The fuel drain valve outlet is behind the left seat on the outside bottom side of the fuselage; to drain off water and dirt the drain pipe is to be pressed into fuselage and subsequently a fuel sample can be taken.

11.3 Precautions

Note	There are certain general precautions and rules concerning the fuel system which should be observed when performing the operations and procedures in this section. These are as follows.

1. During all fueling, defueling, tank purging, and tank repairing or disassembly, ground the aircraft to a suitable ground stake. Use the engine or negative battery terminal for grounding.
2. Residual fuel draining from lines and hose constitutes a fire hazard. Use caution to prevent the spillage of fuel when lines or hoses are disconnected.
3. Cap any open fuel lines and cover connection points to prevent thread damage and the entrance of any foreign matter.

11.4 Trouble shooting

Trouble	Probable Cause	Remedy
No fuel to carburetor.	Fuel shut-off valve not turned on	Turn valve on.
	Fuel tanks empty.	Service with proper grade and amount of fuel.
	Fuel line disconnected or broken.	Connect or repair fuel lines.
	Fuel tank outlet screen plugged.	Drain fuel, remove outlet screen and clean thoroughly.
	Fuel filter plugged.	Replace fuel filter.
	Defective shut-off valve.	Replace shut-off valve.
	Fuel line plugged.	Clean out or replace fuel line.
	Defective mechanical fuel pump.	Replace fuel pump.
Fuel starvation after starting.	Partial fuel flow from the preceding causes.	Use the preceding remedies.
	Plugged fuel vent.	See paragraph 11.14.
	Water in fuel.	Drain fuel tank sumps, fuel lines and carburetors.
No fuel quantity indication.	Fuel tanks empty.	Service with proper grade and amount of fuel.
	Blown fuse / circuit breaker.	Replace fuse / reset circuit breaker.
	Loose connection or open circuit.	Tighten connections, repair or replace wiring.
	Defective fuel quantity indicator or transmitter.	Refer to Section 15.
Fuel overflow from carburetor.	Binding float valve or dirt in floater chamber.	Clean and repair carburetor.
	Plugged fuel distributor or fuel return line jet.	Clean fuel distributor thoroughly.
Pressurized fuel tank.	Plugged fuel vent.	See paragraph 11.14.

11.5 Fuel tank

11.6 Description

The fuel system includes two aluminium wing tanks of 10.6 gal fuel capacity each, a special plastic (manufactured for contact with gas) header tank of 1.1 gal capacity, a drain valve, three fuel valves, a fuel filter, an electric fuel pump, an engine fuel pump and connecting lines. As the fuel tanks are glued to the wing frame, it is not possible to remove them once installed.

11.7 Removal and installation of the header tank

12.7.1 Required Tools: Set of wrench, screwdriver, pliers
12.7.2 Parts required: Fuel resistant sealant fluid
12.7.3 Level of Maintenance: **Heavy**
12.7.4 Certification required: **A&P Mechanic or LSA Repairman Maintenance**

a. Push up sump drain valve, to drain all fuel from the tanks. (Observe precautions outlined in paragraph 11.3.)

b. Remove seats as outlined in Section 3.
c. Disconnect fuel hose for right and left wing-tank
d. Disconnect fuel hose connected to the fuel pump
e. Remove the two metal strips securing the header tank
i. To install header tank, reverse the preceding steps. Be sure grounding is secure in accordance with paragraph 11.3.

Note	Apply appropriate liquid sealant to the threads of drain valve and fuel line connector while reassembling the system.

Figure 11-1

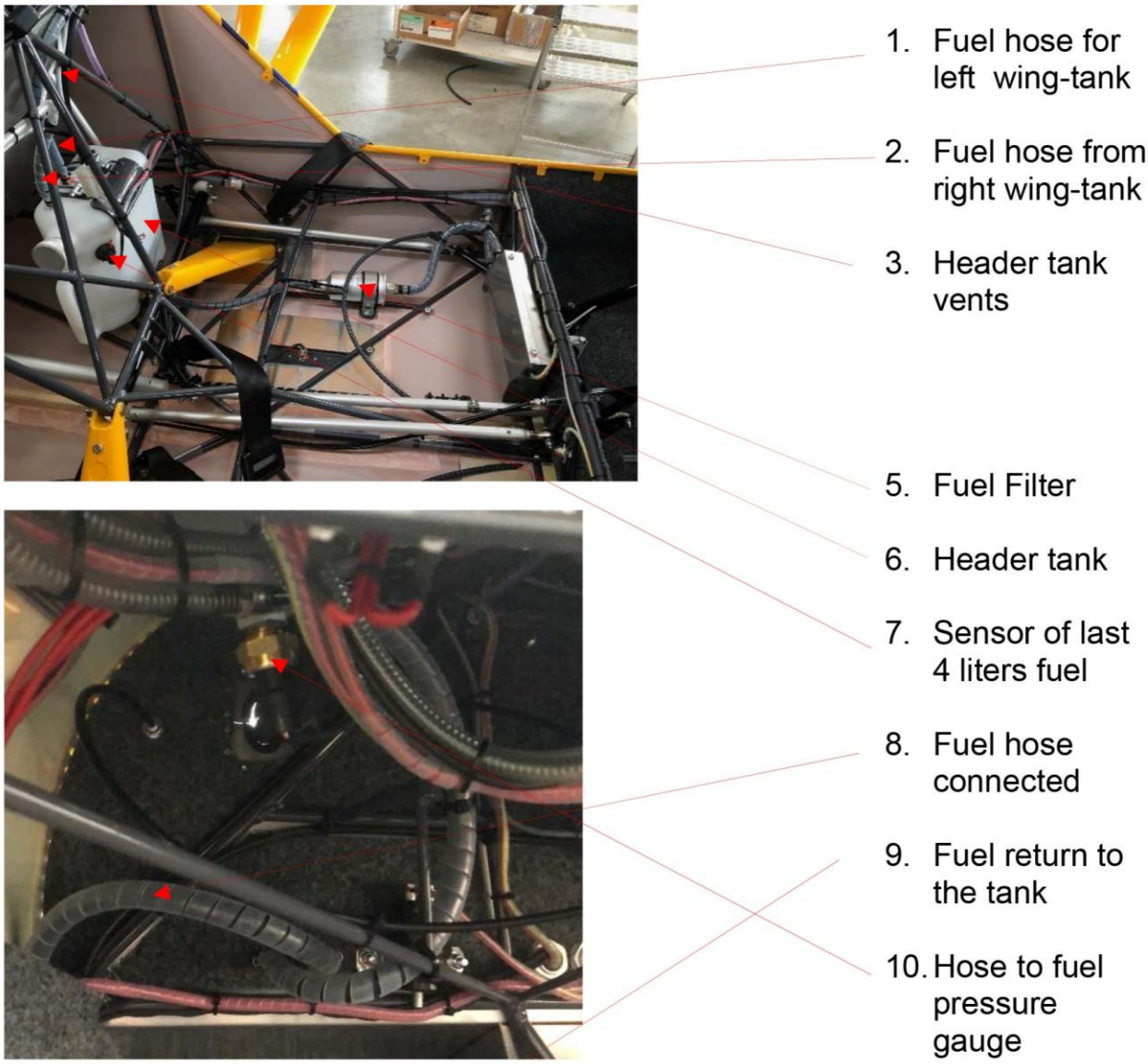

11.8 Fuel filter

The fuel filter is located under the left seat and is attached to the fuel hose a few inches downstream of the fuel header tank. Refer to Section 2 for replacement intervals of the fuel filter.

11.9 Removal and installation

11.9.1 Required Tools:	screwdriver, clamp tongs
11.9.2 Parts required:	Hose clamps, fuel filter
11.9.3 Level of Maintenance:	**Light**
11.9.4 Certification required:	**LSA Repairman Maintenance or Owner**

a. Unplug fuel hoses connected to the filter by loosening the two hose clamps.
b. Disconnect the fuel hoses from the filter.
c. Replace filter.
d. To install filter, reverse the preceding steps. Be sure grounding is secure in accordance with paragraph 11.3.

11.10 Fuel vent (N.3, Figure 11-1)

A vent line is installed to each tank cap and extends overboard in a vertical direction from each wingtank.

11.11 Checking

Dirt may cause the fuel vent to become blocked, with possible fuel starvation of the engine or collapse of the fuel tank. The following procedure may be used to check the vent line.

a. Attach a rubber tube to the end of the vent line above the Wing Tank.
b. Blow gently into tube to slightly pressurize the tank. If air can be blown into tank, vent line is open.
c. After tank is slightly pressurized, insert end of rubber tube into a container of water and watch for a continuous stream of bubbles, which indicates the vent line is clear from obstucles.

11.12 Fuel shut-off valve

There is a two-position ON-OFF fuel shut-off valve for each wing tank, located above the pilots head on either side of the cockpit (N.9 Figure11-1) and a master on-off fuel valve is located below the instrument panel on the left hand side of the cabin. It is recommended that the valve be replaced and not repaired if damaged.

11.13 Removal and installation

11.13.1 Required Tools:	set of wrench, edge cutter, screwdriver
11.13.2 Parts required:	Fuel line fittings, cable ties
11.13.3 Level of Maintenance:	**Heavy**
11.13.4 Certification required:	**A&P Mechanic or LSA Repairman Maintenance**

a. Completely drain all fuel from tank and fuel lines (Observe the precautions in paragraph 11.3).
b. Remove instrument panel
c. Disconnect fuel line at the firewall and at the rear end hose connection.

Caution	For reconnection of fuel line to firewall a new fuel line fitting has to be used, to avoid leakage.

d. Remove screws attaching shut-off valve.
e. Withdraw shut-off valve assembly from the holder on the fuselage.
f. Disconnect fuel lines from shut-off valve.
g. Reverse the preceding steps for installation.

11.14 Fuel drain valve

A fuel drain valve is installed to the bottom of the header tank. Access is possible from beneath the fuselage adjacent to the main gear. To drain fuel, push the white plastic tube upwards.

11.15 Removal and installation

11.14.1 Required Tools: Set wrench, screwdriver.
11.14.2 Parts required: Fuel resistant sealant fluid.
11.14.3 Level of Maintenance: **Heavy**
11.14.4 Certification required: **A&P Mechanic or LSA Repairman Maintenance**

a. Push up sump drain valve , to drain fuel completely from the tank (Observe precautions outlined in paragraph 11.3).
b. Remove the seats as outlined in Section 3.
c. Remove the plastic header tank acoording 11.7
d. Reverse the preceding steps for installation. Be sure grounding is secure in accordance with paragraph 11.3.

Note	Apply appropriate liquid sealant to the threads of the drain valve during reassembling.

11.16 Fuel distributor system (refer to Figure 11-2.)

A fuel distributor is installed to provide fuel for both carburetors. The fuel distributor is located on top of the engine. Pressurized fuel from the fuel pump is routed to both carburetors while surplus of fuel flows back to the fuel tank through a return hose. A 0.02 inch jet is provided to the return hose fitting to ensure the required fuel pressure. A fuel pressure gauge may be connected to check fuel pressure at the opposite side of the return hose connection.

NOTE: The diagram below shows older planes and newer planes have some different arrangements (especially including the fuel filter and electric boost fuel pump under the left seat).

NOTE: When replacing the fuel filter on older planes, we recommend installing the fuel filter under the left seat and using the recommended fuel filter as listed on the Inspection Checklist (and replacing the fuel filter under the left side of the instrument panel with a new length of fuel line).

NOTE: The latest version Inspection Checklist is always available on our Aerotrek-tips web page at...
www.aerotrek.aero/aerotrek-tips.htm

Figure 11-2

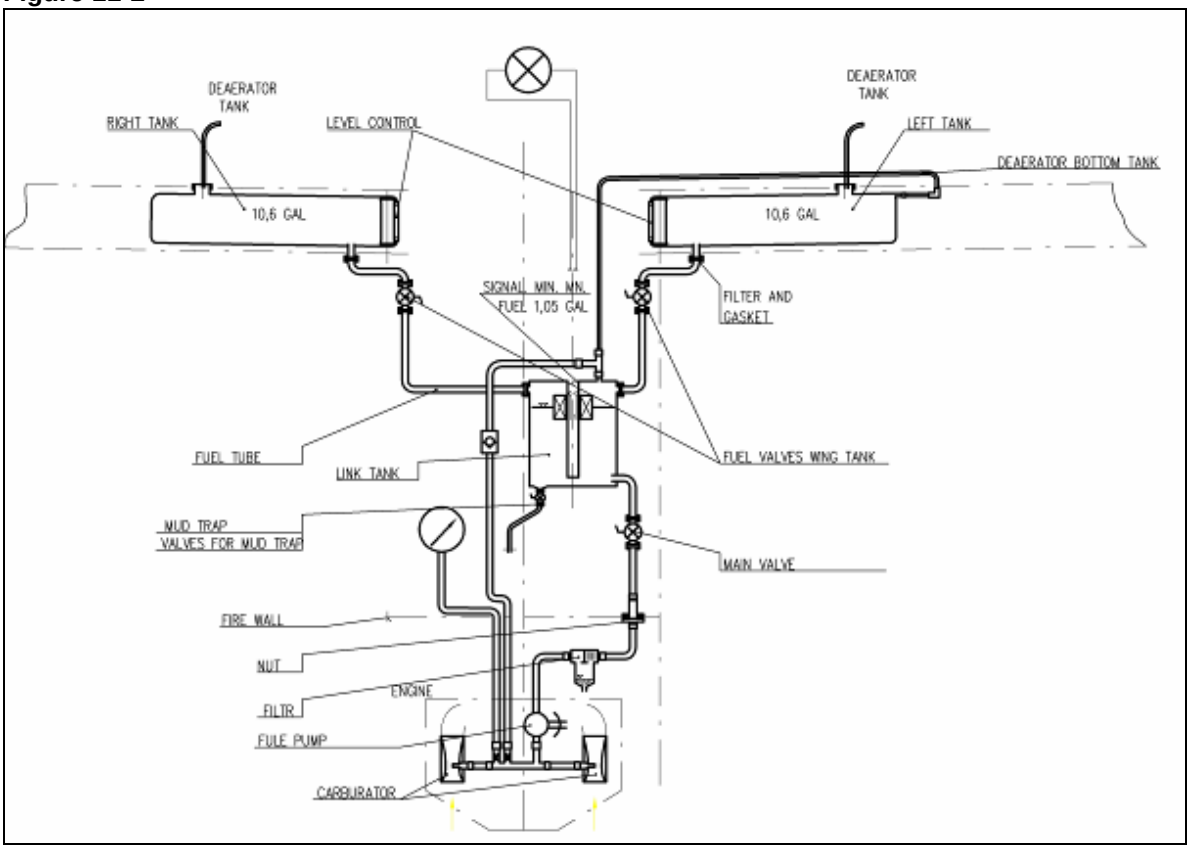

11.17 Removal and installation

11.17.1 Required Tools:	Set of wrench, edgecutter, screwdriver.
11.17.2 Parts required:	Lock screw, copper sealings, hose clamps.
11.17.3 Level of Maintenance:	**Light**
11.17.4 Certification required:	**LSA Repairman Maintenance or Owner**

a. Drain fuel from the fuel lines (Observe precautions outlined in paragraph 11.3.).
b. Disconnect hoses from the fuel distributor block.
c. Remove clamp securing distributor block to engine.
d. Disconnect hose fittings from the distributor.

Caution	Remember position of return hose fitting for reinstallation.

e. Reverse preceding steps for reinstallation (Observe precautions outlined in paragraph 11.3.).

Caution	Always use new copper-washer sealing for reinstallation of hose fittings and new hose clamps for hose connections.

11.18 Inspection

Inspect fuel distributor for clean condition, especially check jet drillings for the return hose and the fuel pressure gauge connection to be unplugged. Clean hose fittings thoroughly before reassembly. Check also the jet provided in the return hose fitting for clean and unblocked condition.

Section 11A - supplementary Section 11A for 914UL engine installations

Fuel system

This section includes some information for the optional Rotax 914UL turbo-charged engine. The Rotax 914UL engine is a sophisticated engine and our aircraft are delivered with the Rotax 914 Operators Manual with a great deal of essential information for operation and maintenance.

For 914UL service and maintenance, this must only be performed by a properly qualified and certified Rotax technician, in accordance with the Rotax 914UL maintenance manuals, which are always available at no cost on the Rotax web site at... www.rotax-owner.com

The Rotax technician must have on hand and follow all instructions and information provided in the Rotax 914 Operators Manual, the Rotax 914 Line Maintenance Manual, and (where applicable) in the Rotax 914 Heavy Maintenance Manual.

Table of contents **Page**

11.1 Fuel system

11.2 Description

The fuel is gravity-fed from the right-hand or left-hand wing tank into the header tank depending which wing tank fuel valve is open. The fuel is then further directed from the header tank via the main fuel valve and fuel filter into the mechanical fuel pump on the engine which delivers the fuel to the carburetors.

The amount of fuel in the tank is indicated by a visual sight gauge which is a part of each tank. Minimum fuel quantity in the header tank is visually indicated by the lighting of a warning light on the instrument panel. The remaining fuel (i.e. 1 gallon) is normally sufficient enough for 15 minutes of flight (at moderate power settings). The fuel drain valve outlet is behind the left seat on the outside bottom side of the fuselage; to drain off water and dirt the drain pipe is to be pressed into fuselage and subsequently a fuel sample can be taken.

11.3 Precautions

Note	There are certain general precautions and rules concerning the fuel system which should be observed when performing the operations and procedures in this section. These are as follows.

1. During all fueling, defueling, tank purging, and tank repairing or disassembly, ground the aircraft to a suitable ground stake. Use the engine or negative battery terminal for grounding.
2. Residual fuel draining from lines and hose constitutes a fire hazard. Use caution to prevent the spillage of fuel when lines or hoses are disconnected.
3. Cap any open fuel lines and cover connection points to prevent thread damage and the entrance of any foreign matter.

11.4 Trouble shooting

Trouble	**Probable Cause**	**Remedy**
No fuel to carburetor.	Fuel shut-off valve not turned on	Turn valve on.
	Fuel tanks empty.	Service with proper grade and amount of fuel.
	Fuel line disconnected or broken.	Connect or repair fuel lines.
	Fuel tank outlet screen plugged.	Drain fuel, remove outlet screen and clean thoroughly.
	Fuel filter plugged.	Replace fuel filter.
	Defective shut-off valve.	Replace shut-off valve.
	Fuel line plugged.	Clean out or replace fuel line.
	Defective mechanical fuel pump.	Replace fuel pump.
Fuel starvation after starting.	Partial fuel flow from the preceding causes.	Use the preceding remedies.
	Plugged fuel vent.	See paragraph 11.14.
	Water in fuel.	Drain fuel tank sumps, fuel lines and carburetors.
No fuel quantity indication.	Fuel tanks empty.	Service with proper grade and amount of fuel.
	Blown fuse / circuit breaker.	Replace fuse / reset circuit breaker.
	Loose connection or open circuit.	Tighten connections, repair or replace wiring.
	Defective fuel quantity indicator or transmitter.	Refer to Section 15.
Fuel overflow from carburetor.	Binding float valve or dirt in floater chamber.	Clean and repair carburetor.
	Plugged fuel distributor or fuel return line jet.	Clean fuel distributor thoroughly.
Pressurized fuel tank.	Plugged fuel vent.	See paragraph 11.14.

11.5 Fuel tank

11.6 Description - aircraft and with 914 engine installation

The fuel system includes two aluminium wing tanks of 10.6 gal fuel capacity each, a special plastic (manufactured for contact with gas) header tank of 1.1 gal capacity, a drain valve, three fuel valves, a fuel filter, with the 914 engine having dual electric fuel pumps, and connecting lines. As the fuel tanks are glued to the wing frame, it is not possible to remove them once installed.

11.7 Removal and installation of the header tank

12.7.1 Required Tools:	Set of wrench, screwdriver, pliers
12.7.2 Parts required:	Fuel resistant sealant fluid
12.7.3 Level of Maintenance:	**Heavy**
12.7.4 Certification required:	**A&P Mechanic or LSA Repairman Maintenance**

a. Push up sump drain valve, to drain all fuel from the tanks. (Observe precautions outlined in paragraph 11.3.)
b. Remove seats as outlined in Section 3.
c. Disconnect fuel hose for right and left wing-tank
d. Disconnect fuel hose connected to the fuel pump
e. Remove the two metal strips securing the header tank
i. To install header tank, reverse the preceding steps. Be sure grounding is secure in accordance with paragraph 11.3.

Note	Apply appropriate liquid sealant to the threads of drain valve and fuel line connector while reassembling the system.

11.8 Fuel filter

The fuel filter is located under the left seat and is attached to the fuel hose a few inches downstream of the fuel header tank. Refer to Section 2 for replacement intervals of the fuel filter.

11.9 Removal and installation

11.9.1 Required Tools:	screwdriver, clamp tongs
11.9.2 Parts required:	Hose clamps, fuel filter
11.9.3 Level of Maintenance:	**Light**
11.9.4 Certification required:	**LSA Repairman Maintenance or Owner**

a. Unplug fuel hoses connected to the filter by loosening the two hose clamps.
b. Disconnect the fuel hoses from the filter.
c. Replace filter.
d. To install filter, reverse the preceding steps. Be sure grounding is secure in accordance with paragraph 11.3.

11.10 Fuel vent (N.3, Figure 11-1)

A vent line is installed to each tank cap and extends overboard in a vertical direction from each wingtank.

11.11 Checking

Dirt may cause the fuel vent to become blocked, with possible fuel starvation of the engine or collapse of the fuel tank. The following procedure may be used to check the vent line.
a. Attach a rubber tube to the end of the vent line above the Wing Tank.

b. Blow gently into tube to slightly pressurize the tank. If air can be blown into tank, vent line is open.
c. After tank is slightly pressurized, insert end of rubber tube into a container of water and watch for a continuous stream of bubbles, which indicates the vent line is clear from obstucles.

11.12 Fuel shut-off valve

There is a two-position ON-OFF fuel shut-off valve for each wing tank, located above the pilots head on either side of the cockpit (N.9 Figure11-1) and a master on-off fuel valve is located below the instrument panel on the left hand side of the cabin. It is recommended that the valve be replaced and not repaired if damaged.

11.13 Removal and installation

11.13.1 Required Tools: set of wrench, edge cutter, screwdriver
11.13.2 Parts required: Fuel line fittings, cable ties
11.13.3 Level of Maintenance: **Heavy**
11.13.4 Certification required: **A&P Mechanic or LSA Repairman Maintenance**

a. Completely drain all fuel from tank and fuel lines (Observe the precautions in paragraph 11.3).
b. Remove instrument panel
c. Disconnect fuel line at the firewall and at the rear end hose connection.

Caution	For reconnection of fuel line to firewall a new fuel line fitting has to be used, to avoid leakage.

d. Remove screws attaching shut-off valve.
e. Withdraw shut-off valve assembly from the holder on the fuselage.
f. Disconnect fuel lines from shut-off valve.
g. Reverse the preceding steps for installation.

11.14 Fuel drain valve

A fuel drain valve is installed to the bottom of the header tank. Access is possible from beneath the fuselage adjacent to the main gear. To drain fuel, push the white plastic tube upwards.

11.15 Removal and installation

11.14.1 Required Tools: Set wrench, screwdriver.
11.14.2 Parts required: Fuel resistant sealant fluid.
11.14.3 Level of Maintenance: **Heavy**
11.14.4 Certification required: **A&P Mechanic or LSA Repairman Maintenance**

a. Push up sump drain valve , to drain fuel completely from the tank (Observe precautions outlined in paragraph 11.3).
b. Remove the seats as outlined in Section 3.
c. Remove the plastic header tank acoording 11.7
d. Reverse the preceding steps for installation. Be sure grounding is secure in accordance with paragraph 11.3.

Note	Apply appropriate liquid sealant to the threads of the drain valve during reassembling.

11.16 Fuel distribution system (refer to Figure 11-2.)

A fuel distributor is installed to provide fuel for both carburetors. The fuel distributor is located on top of the engine. Pressurized fuel from the Rotax 914 fuel pumps is routed to both carburetors while surplus of fuel flows back to the fuel tank through a return hose. A 0.02 inch jet is provided to the return hose fitting to ensure the required fuel pressure. A fuel pressure gauge may be connected to check fuel pressure at the opposite side of the return hose connection.

NOTE: The diagram below is for the 912ULS engine installation **-- the 914ULS engine installatoin utilizes a dual electric fuel pump system under the left seat and there is not an engine-mounted mechanic fuel pump.**

NOTE: When replacing the fuel filter on older planes, we recommend installing the fuel filter under the left seat and using the recommended fuel filter as listed on the Inspection Checklist (and replacing the fuel filter under the left side of the instrument panel with a new length of fuel line).

NOTE: The latest version Inspection Checklist is always available on our Aerotrek-tips web page at... www.aerotrek.aero/aerotrek-tips.htm

Figure 11-2

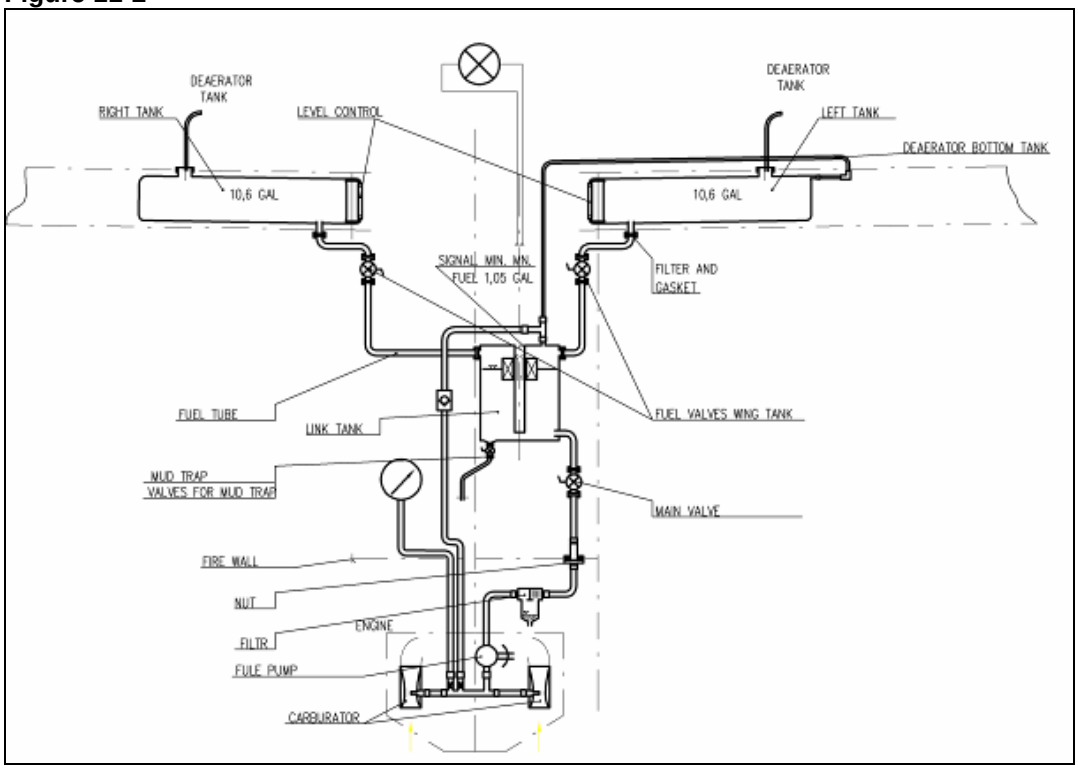

11.17 Removal and installation

11.17.1 Required Tools:	Set of wrench, edgecutter, screwdriver.
11.17.2 Parts required:	Lock screw, copper sealings, hose clamps.
11.17.3 Level of Maintenance:	**Heavy**
11.17.4 Certification required:	**A&P or LSRA-M with Rotax certificatoin**

a. Drain fuel from the fuel lines (Observe precautions outlined in paragraph 11.3.).
b. Disconnect hoses from the fuel distributor block.

c. Remove clamp securing distributor block to engine.
d. Disconnect hose fittings from the distributor.

Caution	Remember position of return hose fitting for reinstallation.

e. Reverse preceding steps for reinstallation (Observe precautions outlined in paragraph 11.3.).

Caution	Always use new copper-washer sealing for reinstallation of hose fittings and new hose clamps for hose connections.

11.18 Inspection

Inspect fuel distributor for clean condition, especially check jet drillings for the return hose and the fuel pressure gauge connection to be unplugged. Clean hose fittings thoroughly before reassembly. Check also the jet provided in the return hose fitting for clean and unblocked condition.

Section 12

Propeller

Table of contents **Page**

12.1 Propeller

A composite, ground-adjustable propeller, equipped with a spinner, is used on the aircraft.

12.2 Repair

Repair of a composite propeller first involves evaluating the damage and determining whether the repair is to be a major or minor one. In general all damage except defective paint or small dents has to be rated as major repair. Refer also to propeller manufacturers manual for further instruction.

WARNING	We strongly recommend to replace propeller if any cracks, deteriorations of the skin or extended dents are determined.

12.3 Removal (refer to figure 12-1.)

12.3.1 Required Tools: 3 & 6 mm Allen wrench,.screwdriver
12.3.2 Parts required: Safety wire, 9x stainless steel screws (M4).
12.3.3 Level of Maintenance: Heavy
12.2.4 Certification required: **A&P or LSRM-A**

WARNING	Be sure master switch is in OFF position and key removed from starter switch before turning propeller.

a. Remove spinner.

Note	The spinner (**1**) is attached to the rear bulkhead . These bulkheads are secured by the propeller mounting bolts (**11**) and will be free by removal of the bolts as the propeller is removed.

b. Remove bolts and pull propeller forward to remove. Use care to avoid damage to bulkheads as propeller is removed.

Figure 12-1 note: sample prop is shown - Aeropro CZ aircraft use various composite props...

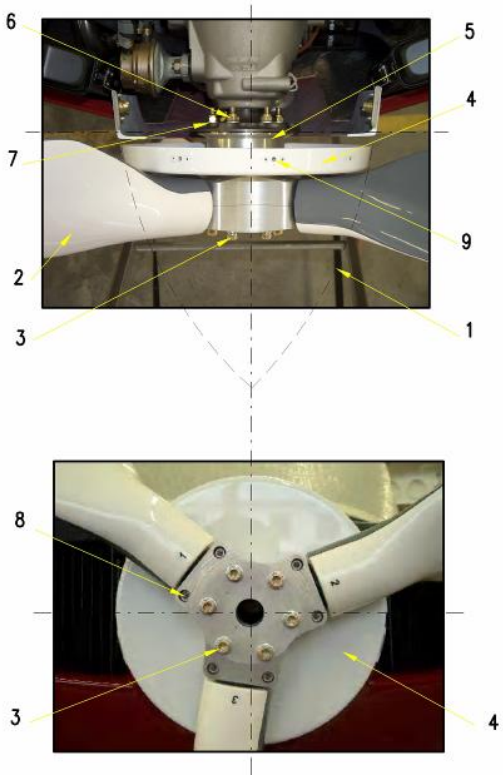

1. Spinner
2. Propeller
3. Mounting bolts M8
4. Rear bulkhead
5. Propeller spacer
6. Self-locking nylock nut
7. Washer
8. Screw M6 (varies with different propellers)
9. Screws and self-locking nuts for holding spinner

12.4 Installation (refer to figure 12-1.)

Clean mating surfaces of propeller, crankshaft flange and spinner bulkheads.

WARNING	Be sure master switch is in OFF position and key removed from starter switch before turning propeller.

a. Install propeller and spinner bulkheads. The spinner bulkheads must be positioned so propeller blades will emerge from the spinner with ample clearance.
b. Set prop blade pitch and tighten the mounting bolts to be torqued in accordance with the prop manufacturer's manual specifications
c. Safety wire propeller mounting bolts (**3**) as needed, unless secured instead with nylock nuts
d. Install spinner. When fitting the spinner use the fixing screws. Do not overtighten the fixing screws.

More and specific information you can find in the Maintenance and Installation Manual from the propeller manufacturer. No work can be performed on the propeller without reference to the prop manufacturer's manual.

Section 13

Utility systems

Table of contents **Page**

13.1 Utility systems

13.2 Heating system

13.3 Description

The heating system is comprised of the heat exchange section of the exhaust muffler, a shut-off valve mounted on the center of the firewall, a push-pull control on the instrument panel, outlets, and flexible ducting connecting the system.

13.4 Operation

Ram air is ducted through a heat exchange section of the exhaust muffler, to the shut-off valve in a chamber on the rear side of the firewall, where it is distributed into the cabin. The shut-off valve operated by a push-pull control marked “Warm”, located beneath the switch panel, regulates the volume of heated air entering the system. Pulling the control full out supplies maximum flow, and pushing control in gradually decreases flow, shutting off flow completely when the control is fully pushed in.

13.5 Trouble shooting

Most of the operational troubles in the heating and ventilating systems are caused by a sticking or binding air valve and its control, damaged air ducting, or defects in the exhaust muffler. In most cases, the valve or control can be freed by proper lubrication. Damaged or broken parts must be repaired or replaced. When checking control, ensure valve responds freely to the control movement, that they move in the correct direction, and that they move through their full range of travel and seal properly. Check that hoses are properly secured, ensure to replace hoses that are burned, frayed or crushed. If fumes are detected in the cabin, a thorough inspection of the exhaust system should be accomplished. Refer to applicable paragraph in Section 10 for this inspection. Since any holes or cracks may permit exhaust fumes to enter the cabin, replacement of the defective parts is imperative because fumes constitute an extreme danger.

13.6 Removal, installation and repair

13.6.1 Required Tools:	screwdrivers
13.6.2 Parts required:	hoses and hose clamps as required.
13.6.3 Level of Maintenance:	**Light**
14.6.4 Certification required:	**LSA Repairman Maintenance or Owner**

Figure 13-1 illustrates the heating and ventilating systems, and may be used as a guide during removal, installation and repair of heating system components. Burned, frayed, or crushed hoses must be replaced with new hoses, cut to length and installed in the original routing. Trim hose winding shorter than the hose to allow clamps to be fitted. Defective air valves must be repaired or replaced. Check for proper operation of the valves and their controls after repair or replacement.

Figure 13-1

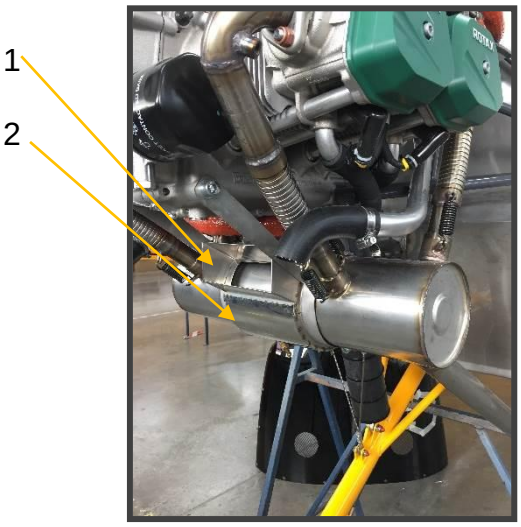

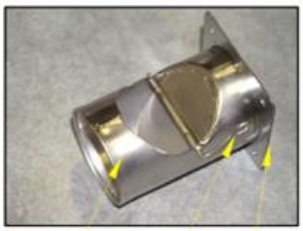

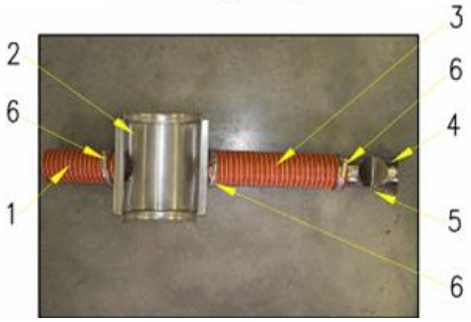

1. Front intake
2. Muffler-wrap for cockpit heating
3. Rear hose
4. Air valve for cockpit heat control
5. Control holder
6. Clamps
7. Plate connecting unit to firewall

note: *the Rotax 914UL engine installation has some small but obvious differences*

13.7 Ventilation system

13.8 Description (Figure 13-2)

The ventilating system is comprised of a NACA-style fresh air-scoop mounted in the right and left side of the cowling behind of firewall. Each side has Independent shut-off valves. The shut-off valves are located on the top of instrument panel and are operated by rotating the valve shut-on/off disc anywhere from the fully open to fully closed position.

Figure 13-2

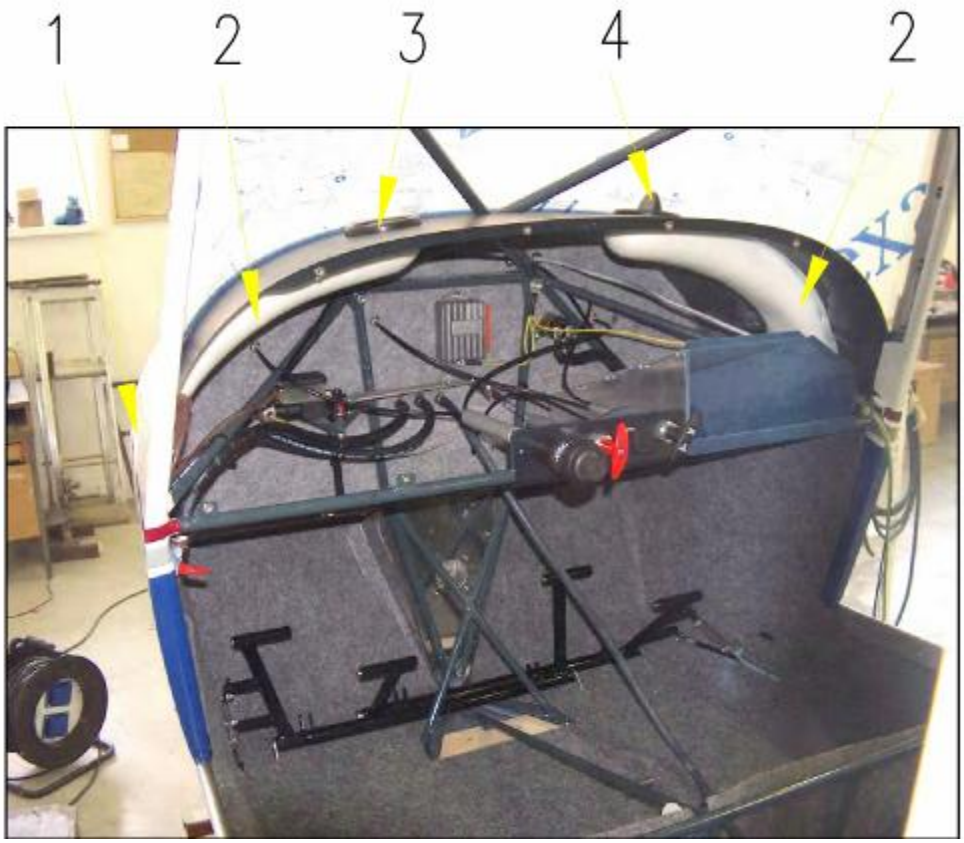

1. NACA fresh air intake
2. tunnel for fresh air
3. valve
4. fresh air vents - on/off disk

13.9 Trouble shooting

Damaged or broken parts must be repaired or replaced.

Section 14

Instruments and instrument system

Table of contents **Page**

14.1 Instrument and instrument systems

14.2 General

This section describes typical instrument installations and their respective operating systems. Emphasis is placed on trouble shooting and corrective measures only. It does not deal with specific instrument repairs since this usually requires special equipment and data and should be handled by instrument specialists. Federal Aviation Regulations require malfunctioning instruments be sent to an approved instrument overhaul and repair station or returned to manufacturer for servicing. Our concern here is with preventive maintenance on various instrument systems and correction of system faults which result in instrument malfunctions. The descriptive material, maintenance and trouble shooting information in this section is intended to help the mechanic determine malfunctions and correct them, up to the defective instrument itself, at which point an instrument technician should be called in. Some instruments, such as fuel quantity and oil pressure guages, are so simple and inexpensive, repairs usually will be more costly than a new instrument. On the other hand, aneroid and gyro instruments usually are well worth repairing. The word “replace instrument” in the text, therefore, should be taken only in the sense of physical replacement in aircraft. Whether replacement is to be with a new instrument, an exchange one, or original instrument is to be repaired must be decided on basis of individual circumstances.

14.3 Instrument panel (refer to figure 14-1.)

14.4 Description

The instrument panel assembly consists of a stationary and mounted panel. The stationary panel contains controls such as the throttle, brake, carburator heat, choke and cockpit heating. The mounted panel contains major flight instruments such as the airspeed indicator, altitude indicator, avionics components, and other equipment. Most of the instruments are screw-mounted on the aluminum frame backs.

14.5 Removal and installation

14.5.1 Required Tools:	Wrench, 10 mm wrench, screwdriwer
14.5.2 Parts required:	Cable ties, insulating tape.
14.5.3 Level of Maintenance:	**Light**
14.5.4 Certification required:	**A&P or LSA Repairman Maintenance or Owner**

14.6 Stationary panel

The stationary panel is located at the lower center section of the cockpit frame. It consistes of a metal support frame and a decorative aluminium cover. To remove the stationary panel proceed as follows:

a. Disconnect battery leads and remove instrument panel.

b. Loosen and unscrew the following controls devices:- throttle, carburator heat, brake, cockpit heating and choke.

Figure 14-1 (older instrument panel configuration shown)

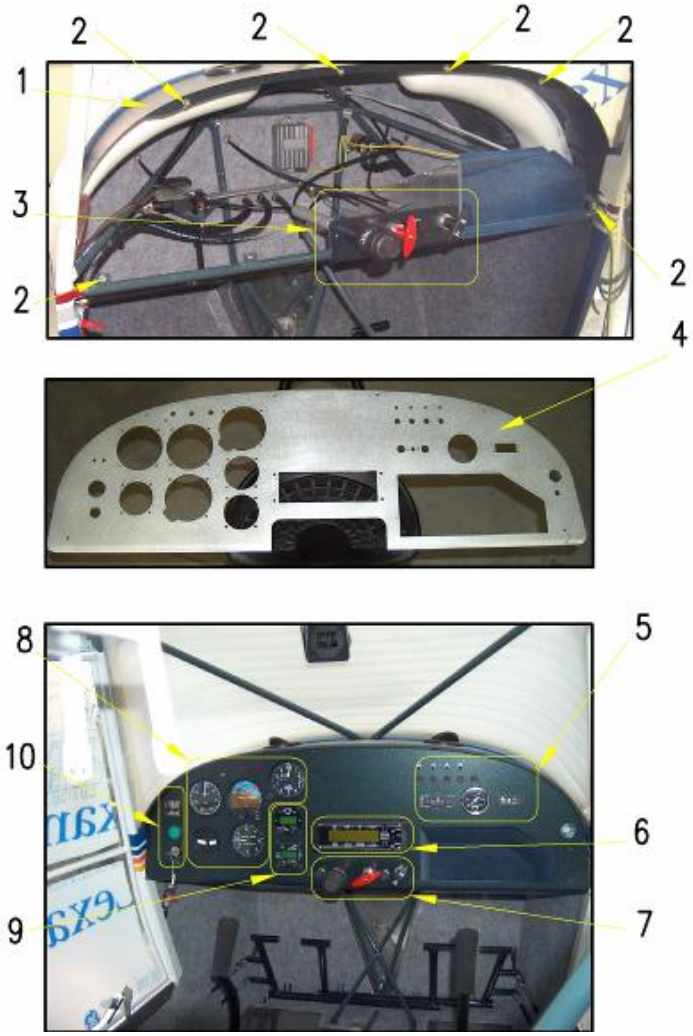

1. panel top cover
2. 9 x holders for instrument panel
3. stationary panel
4. mounted panel
5. area for switches and auxiliary instrument
6. EIS engine instrument
7. engine, brake, cabin and carburetor heating control levers
8. area for flight instruments
9. area for COM and NAV instruments
10. start up engine and master switch

note: in the photos at left, an older instrument panel is shown

note: in the photo below, a newer 2019 instrument panel is shown

14.7 Instrument panel mounting

The mounted panels consist of an aluminum support frame and a decorative painting cover attached to the cockpit main-frame via 9 x screws . To remove a shock-mount panel proceed as follows:

a. Disconnect battery leads and insulate the radio or GPS
b. Unscrew retaining screws and remove aluminium instrument panel.
c. Pull out the upper edge of the frame and lift up to disengage the lower edge from the cockpit main-frame.
d. Disconnect wiring and hoses and remove panel.
e. Reverse preceding steps for reinstallation.

Figure 14-2

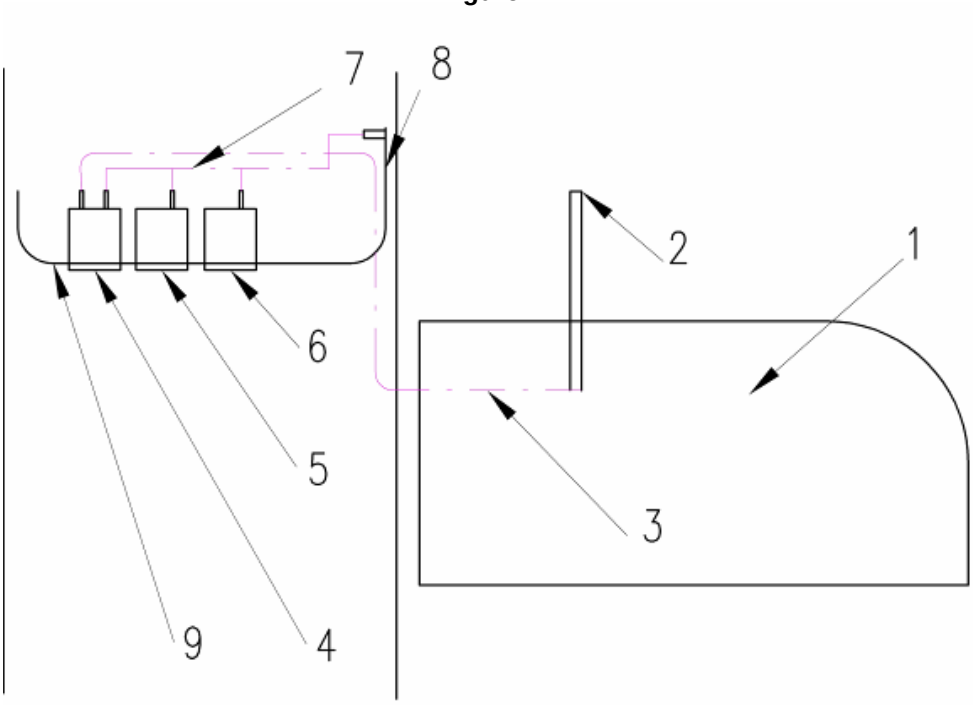

1. right wing
2. pitot tube
3. hose dynamic pressure
4. airspeed indicator
5. vertical speed indicator
6. altimeter
7. n/a
8. n/a
9. instrument panel

14.8 Pitot and static system (refer to figure 14-2.)

14.9 Description

The pitot system conveys ram air pressure to the airspeed indicator. The static system uses cockpit air and there is not a separate static line installed in these aircraft.

14.10 Maintenance

Proper maintenance of pitot system is essential for proper operation of the airspeed indicator. Leaks, moisture and obstructions in the pitot system will result in false airspeed indications. Cleanliness and security are the principal requirements for system maintenance. The pitot tube MUST be kept clean and unobstructed for safe operation.

14.12 Pitot system inspection, leakage test

To check pitot system for leaks, fasten a piece of rubber or plastic tubing over the pitot tube, close opposite end of tubing and slowly roll up the tube until airspeed indicator registers in the cruise range. Secure tube and after a few minutes recheck airspeed indicator. Any leakage will have reduced the pressure in system, resulting in a lower airspeed indication. Slowly unroll the tubing before removing it, so pressure is reduced gradually. Otherwise the instrument may be damaged. If test reveals a leak in system, check all connections.

14.13 Blowing out lines

Condensation may collect in the system and produce a partial obstruction. To clear the hose, disconnect it at the airspeed indicator. Gently blow from the indicator end of line toward the pitot tube.

Caution	Never blow through pitot line towards instruments.

Replace any hose which has cracked, hardened or show other signs of deterioration.

14.14 Removing and installation of components (refer to figure 14-1, 14-2.)

14.14.1 Required Tools: Edge cutter
14.14.2 Parts required: Cable ties, hoses as required.
14.14.3 Level of Maintenance: **Light**
14.14.4 Certification required: **LSA Repairman Maintenance or Owner**

To remove the pitot tube, unscrew the retaining nut and withdraw the tube from the support tube. A pitot line running within the left wing is fixed inside the wing and can not be removed if damage to the original pitot line inside the wing is detected. The pitot line is connected to the fuselage adjacent to the root rib, access is possible when the left wing is folded back (refer to Pilot Operators Handbook).

14.15 Trouble shooting - Pitot static system

Trouble	Probable Cause	Remedy
Low or sluggish airspeed indication (normal altimeter and vertical speed).	Pitot tube obstructed, leak or obstruction in pitot line.	Test pitot tube and line for leaks or obstructions. Blow out tube and line, repair or replace damaged line.

14.16 Trouble shooting - Airspeed indicator

Trouble	Probable Cause	Remedy
Pointer fails to respond.	Pitot pressure connection not properly connected to pressure line from pitot tube.	Test line and connection for leaks. Repair or replace damaged line.
	static port clogged.	check and clear static port
Incorrect indication or pointer oscillates.	Leak in pitot line.	Test lines and connections for leaks. Repair or replace damaged lines.
	Defective mechanism or leaking diaphragm.	Substitute known-good indicator and check reading. Replace indicator.
Pointer vibrates.	Excessive vibration.	Check panel shock mounts and replace if required.
	Excessive tubing vibration.	Check clamps, cable ties and line connections for security.

14.17 Trouble shooting – Altimeter

Trouble	Probable Cause	Remedy
Instrument fails to operate.	Static port plugged.	Check altimeter static port for obstruction.
	Defective mechanism.	Substitute known-good altimeter and check reading. Replace indicator.
Incorrect indication.	Pointer not carefully set.	Reset hands with knob.
	Leaking diaphragm.	Substitute known-good altimeter and check reading. Replace indicator.
	Pointers out of calibration.	Compare reading with known-good altimeter. Replace indicator.
Pointer oscillates.	Static pressure irregular.	Check lines for obstruction or leaks. Blow out lines.
	Leak in airspeed or vertical speed indicator installations.	Check other instruments and system plumbing for leaks. Blow out lines.

14.18 Trouble shooting - Vertical speed indicator

Trouble	Probable Cause	Remedy
Instrument fails to operate.	Static line plugged.	Check port for obstruction.

Incorrect indication.	Partially plugged static port.	Check port for obstruction.
	Ruptured diaphragm.	Substitute known-good indicator and check reading. Replace indicator.
	Pointer off zero.	Reset pointer to zero.
Pointer oscillates.	Partially plugged static port.	Check static port for obstructions.

14.19 Engine indicators

14.20 EIS engine instrument system

14.21 Description

The EIS engine instrument system is manufactured in the USA by Grand Rapids Technologies. The EIS provides the following indicators: Engine rpm, coolant temperature, oil temperature, oil pressure, exhaust gas temperatures, outside air temperature, flight timer and operation hours.

The operating data is being constantly compared with the specific engine operating limits. If the signalled operating data exceeds the stored operating limits, the EIS will warn the pilot by means of a warning light.

NOTE: For detailed information regarding the EIS, basic informatoin is in Aeropro aircraft POH and with more specific information in the EIS Manual included with aircraft documentation

14.22 Removal and installation

14.26.1 Required Tools: 3 mm allen wrench, screwdriver, edge cutter.
14.26.2 Parts required: Cable ties, 4 x self-locking nut (M4).
14.26.3 Level of Maintenance: **Light**
14.26.4 Certification required: **LSA Repairman Maintenance or Owner**

a. Disconnect battery leads and insulate as safety precaution.
b. Unscrew the nine screws which hold the aluminium instrument panel
c. Pull out the upper edge of the frame and lift up to disengage the lower edge from the cockpit main-frame.
d. Disconnect the wiring and hoses and remove panel.
e. Unscrew and remove the EIS instrument.
f. Reverse the preceding steps for reinstallation.

14.23 Trouble shooting

Trouble	**Probable Cause**	**Remedy**
EIS fails to operate.	Low battery voltage.	Check, recharge or replace battery. Refer to Section 2.
	Blown fuse or circuit breaker.	Replace fuse or reset circuit breaker.
	Defective EIS	Substitute known-good EIS and check operation. Replace EIS.

Incorrect Indication	Defective sensor.	Replace sensor.
	Improper connection.	Check terminals, repair or replace defective parts.
No reading / dashes	Broken wiring or damaged connectors.	Check wiring and connections, repair or replace defective parts.
	Defective EIS.	Substitute known-good EIS and check operation. Replace EIS.

14.24 Magnetic compass

14.25 Description

The magnetic compass is liquid-filled, with expansion provisions to compensate for temperature changes. It is equipped with compensating magnets adjustable from front of case. No maintenance is required on compass except on occasional check on a compass rose for adjustment of compensation.

14.26 Slip indicator.

A slip indicator is provided on the left panel or is incorporated into an electronic EFIS. The slip indicator needs no servicing at all.

Section 15

Electrical systems

Note: This information is specific to the Rotax 912ULS engine installations. For aircraft with the optional Rotax 914UL turbo engine, refer to the Rotax manuals for some additional electrical system details.

Table of contents **Page**

Table of contents (continued) **Page**

15.1 Electrical system

15.2 General

This section contains service information necessary to maintain the aircraft electrical power supply system, battery, alternator power system, aircraft lighting system and electrical load analysis.

15.3 Electrical power supply system

15.4 Description

Electrical energy for the aircraft is supplied by a 14-volt, direct-current, single-wire, negative ground electrical system. A 12-volt battery supplies power for starting and furnishes a reserve source of power in the event of alternator failure. An engine driven alternator is the normal source of power during flight and maintains a battery charge controlled by a voltage regulator.

15.5 Master wiring system

The aircraft is equipped with a master wiring system, featuring various terminal connectors to provide easy installation of additional electric equipment. The master wiring also provides a master power bus and an avionics power bus system. Refer to Section 18 for detailed wiring diagrams.

15.6 Switch panel

A switch panel is located at the right hand side of the instrument panel. All switches are located in this area, apart from the keyed and magneto switches which are located on the left side of the instrument panel.

15.7 Keyed switch

The keyed switch is located below the magneto switches. The keyed switch operates the battery and alternator system. The switch, when operated, connects the battery to the engine wiring system, activating the power systems.

15.8 Avionics switches

When the avionics switch is operated, power to the avionics bus system is enabled. The avionics bus system provides power to electronical devices like radio, intercom, transponder, GPS, attitude indicator, etc. (see labels on instrument panel).

15.9 Ignition and magneto switches

Two magneto switches are installed on the left hand side of the instrument panel above the starter button, both magneto switches are protected by metal sidewalls. Starting the engine is only possible after the keyed switch and the ignitions switches are in the on position.

WARNING	Switching off the keyed switch while engine running will damage the voltage regulator with serious damage to all installed electronic equipment.

15.10 Automatic circuit breakers panel

The circuit breakers are installed on the right side of instrument panel. The panel provides 6 automatic circuit breakers for the avionics bus system.

15.11 Optional equipment

15.13 Connecting avionics devices

The avionics wiring system of the aircraft provides terminal connectors for various extensions like: radio, intercom, transponder, GPS, attitude-gyro, directional-gyro, turn indicator.

15.14 Battery power system

15.15 Battery

15.16 Description

The A240 uses a high-tech Powersafe SBS8 battery which is 12v, 7 amp-hour capacity. The battery is mounted below the right seat. The battery installation is sealed and so requires no maintenance (other than periodic charging during periods of disuse, to maintain an adequate battery charge for good battery health and life).

15.17 Removal and installation

16.19.1 Required Tools: Screwdriver, set of wrench.
16.19.2 Parts required: None
16.19.3 Level of Maintenance: **Light**
16.19.4 Certification required: **LSA Repairman Maintenance or Owner**

a. Remove the fiberglass seat base.
b. Remove the battery retaining strap.
c. Disconnect the ground cable from the negative battery terminal.

Caution	When installing or removing battery, always observe the proper polarity with the aircraft electrical system (negative to ground). Reversing the polarity, even momentarily, may result in the failure of semiconductor devices (regulator diodes, radio protection diodes and radio transistors).

d. Disconnect the cable from the positive terminal of the battery.
e. Lift the battery out of the battery box.
f. To replace the battery, reverse preceding steps.

15.18 Trouble shooting

Trouble	Probable Cause	Remedy
Battery will not supply power to electrical system or crank engine.	Battery discharged.	1. Measure voltage at battery terminal with master switch and suitable load turned on. Normal battery will indicate 11.5 – 12.0 volts. If voltage is low, proceed to step 2. If voltage is normal, proceed to step 3.
	Battery faulty.	2. Charge battery in accordance with charging information found on the battery. If battery voltage drops below 11.5 volts 12 hours after charging, when connected to the aircraft with master switch turned on, replace battery.
	Faulty wiring.	3. Check voltage on master fuse/circuit breaker. Voltage shall not indicate more than 0.3 volts below battery voltage. Replace defective wiring, master switch or connectors.

15.19 Cleaning the battery

For maximum efficiency the battery and connections should be kept clean at all times.

a. Remove the battery and connections in accordance with the preceding paragraph.
b. Wipe the battery cable ends, battery terminals and the entire surface of the battery with a clean cloth moistened with a solution of bicarbonate soda (baking soda) and water.
c. Rinse with clear water, wipe off excess water and allow battery to dry.
d. Brighten up cable ends and battery terminals with emery cloth or a wire brush.
e. Install the battery according to the preceding paragraphs.
f. Coat the battery terminals with an ignition spray product to reduce corrosion.

15.20 Testing the battery

When battery is disconnected from the electrical system of the aircraft, voltage measuring should indicate 12.2 volts or above (regular 12.5 volts). If battery voltage is below 12.2 volts, battery needs to be charged. When battery voltage is below 11.8 volts battery probably needs replaced.

15.21 Charging the battery

Battery should in general be charged only when disconnected from the aircraft. Charge battery in accordance to the charging instructions found on the battery. For methods to trickle-charge/maintain the battery charge without necessarily removing the battery from the aircraft, contact the Aeropro distributor.

15.22 Alternator power system

15.23 Description

The alternator is an integral part of the engine, rated at 14 volts at 20 amperes continuous output. The output signal is fed to an external rectifier regulator provided in the aircraft electrical system.

15.24 Removal and installation

Refer to the Rotax maintenance manual for information about the removal and installation of the engine alternator system.

15.25 Trouble shooting

Refer to the Rotax maintenance manual for information about trouble shooting for the engine alternator system.

15.26 Voltage rectifier regulator

15.27 Description

The rectifier regulator is located on the right internal side of the firewall. Feeding wires from the alternator (left side of ignition housing on the engine) are routed directly to the regulator. The resulting dc output is applied to the aircraft battery and master wiring system.

15.28 Removal and installation

16.30.1 Required Tools:	4 mm allen wrench, 8 & 10 mm wrench, screwdriver.
16.30.2 Parts required:	2 x self-locking nut (M5), insulating tape.
16.30.3 Level of Maintenance:	**Light**
16.30.4 Certification required:	**A&P, LSRM-A or Owner**

a. Remove the cowling, instrument panel and seat.
b. Disconnect battery leads and insulate as a safety precaution.
c. Unplug the terminal connector on the regulator case.
d. Unscrew and remove the regulator from the firewall.
e. Reverse preceding steps for reinstallation.

15.29 Testing the voltage regulator

Check the system voltage as shown on the EIS instrument. The voltage should indicate 13.8 +/- 0.3 volts with engine running.

15.30 Trouble shooting

Refer to the appropriate Rotax engine maintenance manual for information about trouble shooting of the engine alternator system.

15.31 Aircraft lighting system

15.32 Description

The aircraft lighting system consists of navigation lights, a pair of small landing lights, anti-collision strobe lights and some lighted instruments. All electrical switches to control the lighting system are located on the switch panel as outlined in paragraph 15.6.

15.33 Trouble shooting

Trouble	Probable Cause	Remedy
Landing light out.	Short circuit in wiring.	1. Inspect circuit breaker. If open, proceed to step 2. If OK, proceed to step 3.
	Defective wiring.	2. Test each circuit separately until short is located. Repair or replace wiring.
	Defective switch.	3. Check voltage at light with master switch and landing light switch ON. Should read battery voltage. Replace switch.
All nav lights out.	Short circuit in wiring.	1. Inspect fuse/circuit breaker. If open, proceed to step 2. If OK, proceed to step 3.
	Defective wiring.	2. Test each circuit separately until short is located. Repair or replace wiring.
	Defective switch.	3. Check voltage at nav lights with master switch and nav light switch ON. Should read battery voltage. Replace switch.
One nav light out.	Lamp burned out.	Inspect lamp, replace lamp.
	Open circuit in wiring.	Test wiring for continuity. Repair or replace wiring.
Anti-collision strobe light out.	Flash tube burned out.	Test with new tube, Replace tube.
	Faulty wiring.	Test for continuity, Repair or replace.
	Circuit breaker open or fuse blown.	Inspect, reset.
	Faulty switch.	Test for continuity, Repair or replace.
Instrument lights will not light.	Short circuit in wiring.	1. Inspect fuse/circuit breaker. If open, proceed to step 2. If OK, proceed to step 3.
	Defective wiring.	2. Test each circuit separately until short is located. Repair or replace wiring.
	Defective switch.	3. Check voltage at lights with master switch and instrument light switch ON. Should read battery voltage. Replace switch.
	Lamps burned out.	Inspect lamps, replace lamps.

15.34 Navigation lights

15.35 Description

The navigation lights are located on each wing tip. The lights are controlled by a rocker type switch located on the switch panel.

15.36 Removal and installation

16.38.1 Required Tools: Screwdriver
16.38.2 Parts required: None
16.38.3 Level of Maintenance: **Light**
16.38.4 Certification required: **Owner**

a. Unscrew and remove the colored protective cover.
b. Withdraw and unplug the lamp.
c. Reverse the preceding steps for reinstallation.

Caution	Do not over-tighten the cover fixing screws at reinstallation, to prevent the cover from cracking.

15.37 Anti collision strobe lights

15.38 Description

The A240 is equipped with wingtip strobe and position lights. See separate installation and operation information provided with that equipment. The A240 is not approved for night flight.

15.42 Removal and installation

Refer to the appropriate user manuals provided with the instruments and avionics devices for instructions about replacement of instrument and avionics lights.

15.43 External receptacle - not applicable

15.44 Description

A standard-type cigarette lighter socket is provided on the right side of the instrument panel. This power socket is always connected to the aircraft electrical system and thus to the battery. With proper adapter, it is possible to trickle-charge the aircraft battery through this panel power socket. The trickle charger must NOT be above 2-amp output, and 1.5 or 1-amp trickle charger is best.

15.45 Removal and installation

16.47.1 Required Tools: set of wrenches, soldering iron.
16.47.2 Parts required: cable ties, insulating tape, solder.
16.47.3 Level of Maintenance: **Light**
16.47.4 Certification required: **LSA Repairman Maintenance or Owner**

To remove the cigarette lighter socket, proceed as outlined below.

a. Disconnect the battery leads and insulate as safety precaution.
b. Disconnect the wiring from the receptacle, note wiring for reinstallation.
c. Unscrew and remove the receptacle
d. Reverse preceding steps for reinstallation.

15.46 Alterations

15.47 Emergency Locater Transmitter

15.48 Description

The ELT is a self-contained, solid state unit, with its own power supply, with an externally mounted antenna. The Artex ELT345 ELT is designed to transmit on the 406 and the 121.5 Megahertz frequencies. Power is supplied to the transmitter by a battery-pack which has the service life placarded on the batteries. A rocker type switch at the forward side of the ELT is provided to arm or manually operate the system (for example for testing purposes). A remote controller is installed on the A240/A220 instrument panel.

15.49 Installation

The ELT is installed under the right rear seat and is not readily accessible. To access, the fiberglass seat base needs to be removed.

15.51 Landing light

15.52 Description

The small dual-light landing/taxi light is mounted on the front of the lower engine cowling. This position facilitates the use as both a landing and a taxi light. The landing/taxi light is controlled by a switch located on the instrument panel. The A220/A240 is not approved for night flight.

15.53 Installation

For installation of the landing light, refer to figure 15-1. The basic equipment of the aircraft already contains the electrical wiring including a switch inside the cabin. Therefore installation is limited to running appropriate wiring from the connector box located forward of the firewall to the lamp position on the lower cowling. The position light set contains required wiring, including connectors, terminals, lamp assembly and fasteners.

Figure 15-1

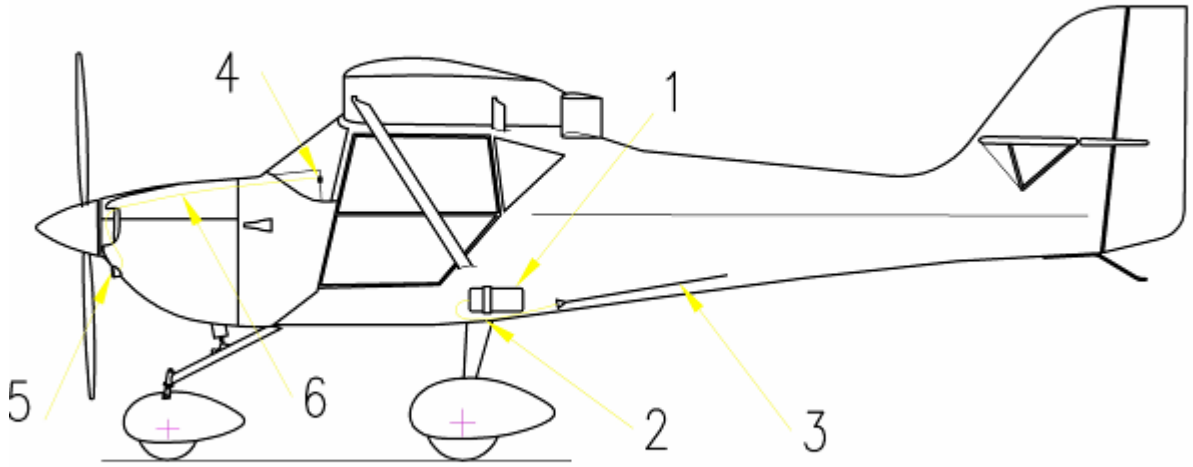

1. Emergency locator transmitter (ELT)
2. Antenna cable
3. Antenna (2016 and newer - on top of fuselage)
4. Switch for landing light
5. landing/taxi light
6. cable for landing light

15.54 Electrical load analysis chart

Standard equipment (running load)	**Amps**
fuel indicator……..... fuel pump……..... Whelen LED strobe ……..... Whelen LED position lights……..... EIS electronic engine instrument…….....	* 1.0 0.5 (approx.) 0.5 (approx.) 0.4
Optional equipment (running load)	
transponder…….....… COM radio…….....…….	1.3 0.5 - 2.5
Items not considered as part of running load	
External receptacle……..... Landing light…….....	max. 4.0 4.6

Section 16
Structural repair

Table of contents **Page**

16.1 Structural repair

16.2 Repair criteria

Although this section outlines repairs permissible on the structure of the aircraft, the decision of whether to repair or replace a major unit of structure will be influenced by such factors as time and labor available, and by a comparison of labor costs with the price of replacement assemblies. Past experience indicates that replacement, in many cases, is less costly than major repair. Certainly, when the aircraft must be restored to its airworthy condition in a limited length of time, replacement is preferable. Restoration of a damaged aircraft to its original design strength, shape, and alignment involves careful evaluation of the damage, followed by exacting workmanship in performing the repairs. This section suggests the extent of structural repair practicable on the aircraft, and supplements Federal Aviation Regulation, Part 43. Consult the factory when in doubt about a repair not specifically mentioned here.

16.3 General consideration for welded frame repair

Minor damages, not affecting the aircraft airworthiness, may be repaired provided the scope of work does not extend beyond cases described below:

The operator is allowed to carry out only such repairs of the lattice-work in operation that do not require either use of a welding equipment or application of thermal treatment for straightening. Straightening of such structural members is permitted if, the deflection does not exceed 3% member length-member diameter ratio. A **local** deflection (depression) not exceeding 5% of tube dimension in its diameter can be considered admissible provided this tube is not damaged by cracks or some other non-reversible deformation.

16.4 Repair of aircraft skin

If damage occurs under operation, the skin can be repaired by replacing the whole part of the damaged fabric, or by a local repair using a patch. Such repairs may be carried out using the same materials as applied at aircraft fabrication.

16.5 Repair of fiberglass parts

If damage to these parts occurs, only a repair with use of epoxy resins and fiberglass cloth is applicable. It is necessary to thoroughly clean the surface of the parts under repair up to the base material and to remove any grease and paint. When making repairs, follow the manufacturers directions for the use of epoxy materials.

16.6 Damages of larger extent.

When damages of larger extent is found, we recommend to consult the manufacturer. Always replace parts and components with parts and components of the same material specification.

Section 17

Exterior painting

The exterior painting of the aircraft is an Imron polyurethane paint system from DuPont. Please contact the aircraft distributor for more information.

Note	Do not paint the pitot tube, gas caps or antenna covers which were not painted by the factory.

Caution	Avoid thinner coming in contact with ABS parts or windows. These areas should be cleaned with mild soap and water. Do not use strong solvents such as xylol, toluol, or lacquer thinners.

Section 18

Wiring diagrams - General wiring scheme

This diagram is specific to the standard 912ULS installation - refer to the Rotax 914UL manuals for additional or different wiring with that optional engine installation.

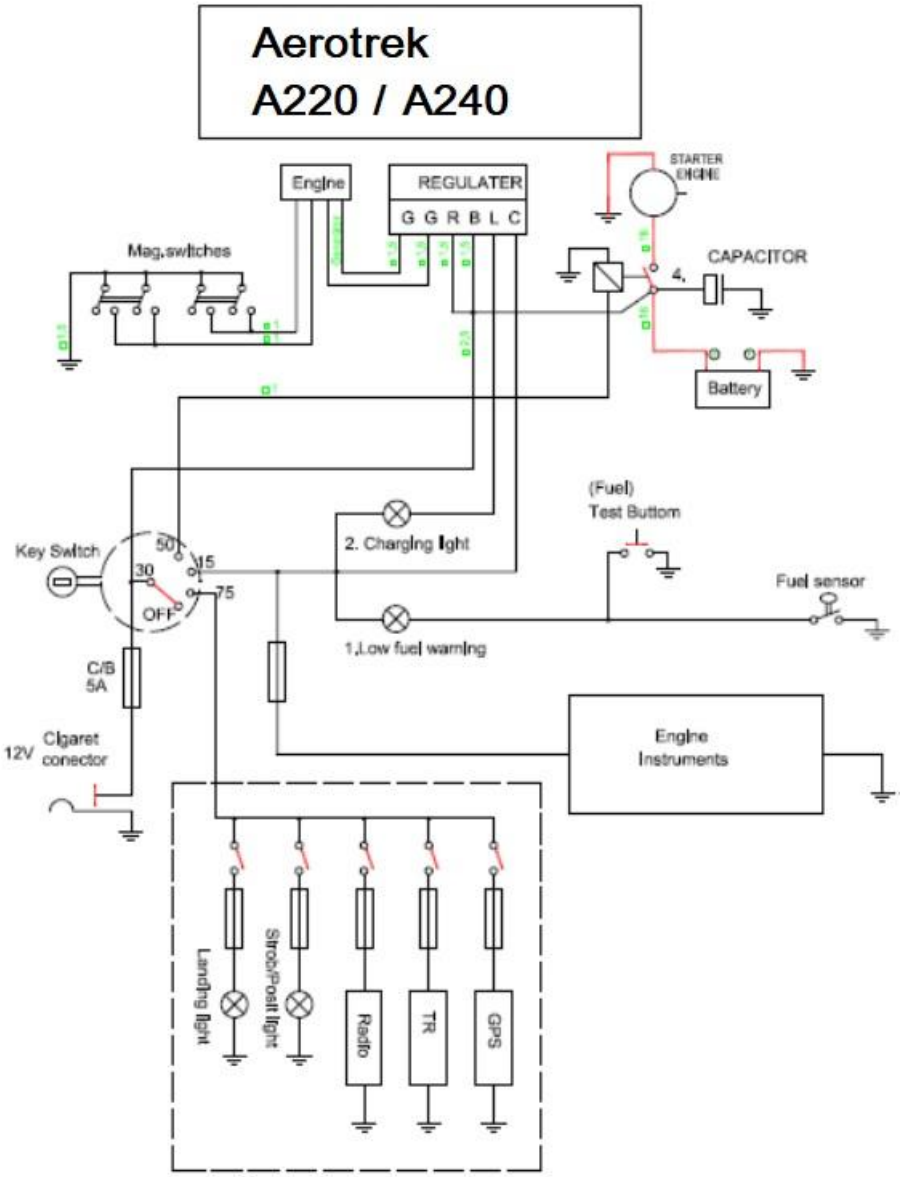

Section 19

Safety directives and safety monitoring system

Table of contents Page

19.1 General

Safety directives are issued by Aeropro CZ, to ensure the safe operation of the aircraft if required. Safety directives are issued in accordance to the applicable ASTM continued airworthiness specification. Service Directives are considered as mandatory tasks in order to maintain a condition of safe operation and compliance with the applicable original ASTM design specification.

19.1.1 Notice of corrective action

When corrective action is determined to be warranted, Aeropro CZ will issue a notice to the known owner/operators of the affected aircraft. These notices are titled by one of the following uppercase letters:

“SAFETY ALERT”	Notifications that require immediate action.
“SERVICE BULLETIN”	Notifications that do not require immediate action but do recommend future action.
“NOTIFICATION”	Notifications that do not require necessarily recommended future action but are primarily for promulgation of continued airworthiness information.

19.1.2 Safety directive, structure

Every safety directive consists of the following information:

- the title in bold uppercase letters and subject
- name and contact information of the issuing entity
- release date
- date the notice takes effect
- limitations for completion of any required corrective action
- make and model of the affected LSA aircraft
- serial number of the affected LSA aircraft
- page number and the number of total pages
- reason for the corrective action
- subject of the corrective action
- listing of the tools needed to accomplish the task
- list of the parts needed to accomplish the task
- type of maintenance (line, heavy, overhaul)
- level of certification required to accomplish the task

- detailed instructions and diagrams as needed to perform the task
- method to test/inspect to verify the task was accomplished properly

19.2 Operational safety monitoring system

An operational safety monitoring system is maintained by Aeropro CZ to ensure the continued airworthiness of your aircraft. To receive and evaluate all safety of flight and service difficulty reports a feedback form is provided with this maintenance manual.

19.2.1 Owner/Operator responsibilities

1. Each owner/operator of an LSA airplane should read and comply with the maintenance and continued airworthiness information and instructions provided by the manufacturer.

2. Each owner/operator of an LSA airplane shall be responsible for providing the manufacturer with current contact information where the manufacturer can send the owner/operator supplemental notification bulletins.

3. The owner/operator of an LSA airplane shall be responsible for notifying the manufacturer of any safety of flight issue or significant service difficulty upon discovery.

4. The owner/operator of an LSA airplane shall be responsible for complying with all manufacturer issued notices of corrective action and for complying with all applicable aviation authority regulations in regard to maintaining the airworthiness of the LSA airplane.

5. An owner of an LSA airplane shall ensure that any needed corrective action be completed as specified in a notice, or by the next scheduled annual inspection.

6. Should an owner/operator not comply with any mandatory service requirement, the LSA airplane shall be considered not in compliance with applicable ASTM standards and may be subject to regulatory action by the presiding aviation authority.

Note

The feedback form is provided as attachment to this maintenance manual to submit information to the aircraft manufacturer.

MAINTENANCE MANUAL
Supplement for
A220 taildragger

Aeropro CZ - A220

1.9.2 CG - calculation

A specific C.G. calculation recommendation which has to be carried out prior to each flight is provided in the Pilot Operating Handbook, Section 4.

Figure 1-6.

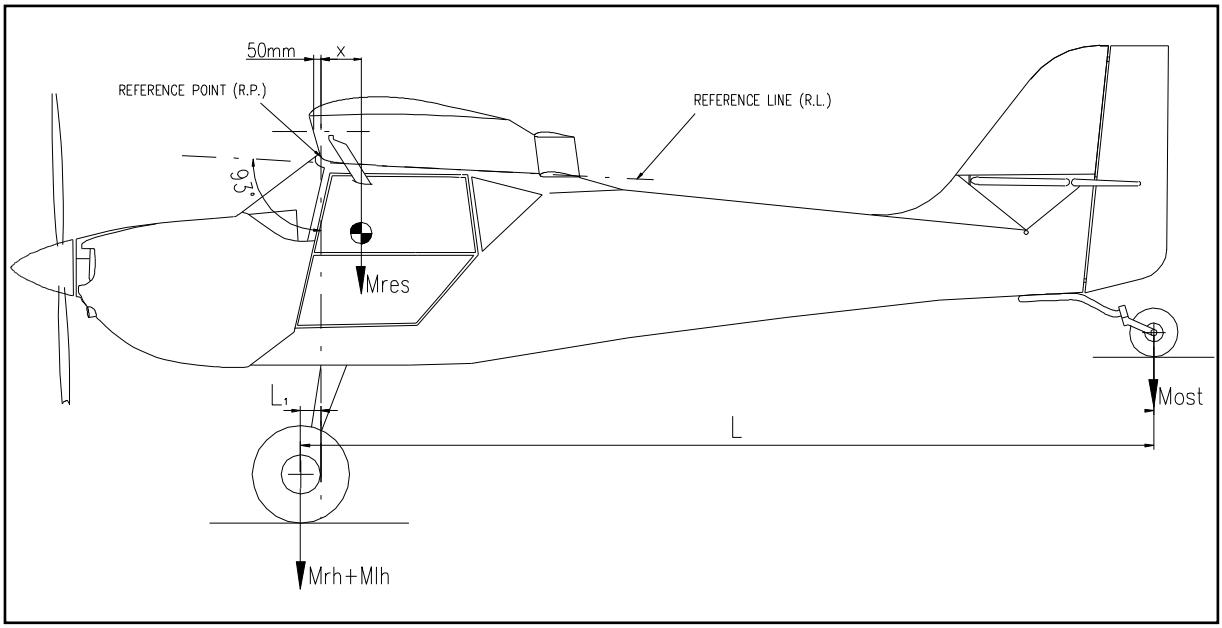

Figure 1-7

Weight and C.G. position record (sample only)

Serial Number		**Registr. Mark:**	

Aircraft Levelling:

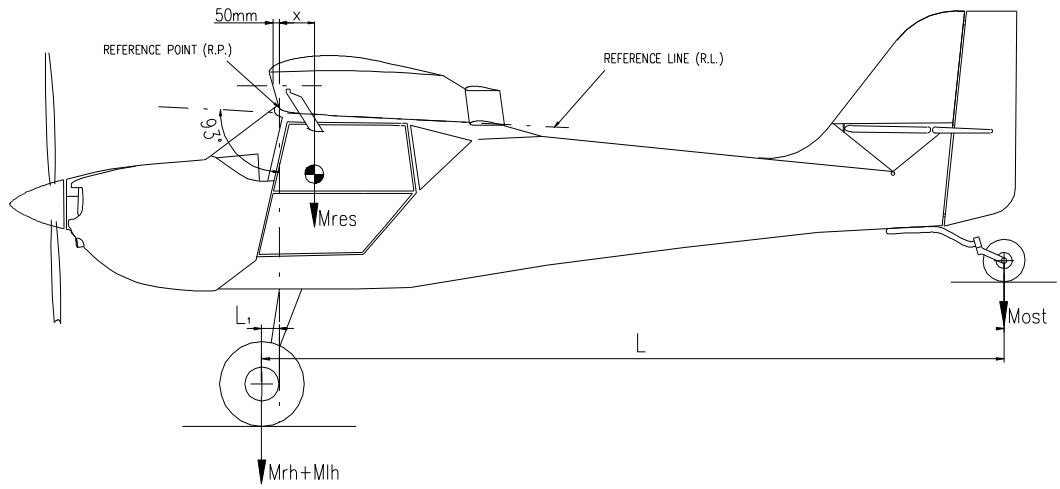

Values Weighed:

Main wheels	right-hand	Mrh =	kg	L=	mm
	left-hand	Mlh =	kg	L_1=	
Tail wheel		Most =	kg		

Resulting weight	Mres =	kg	lbs

C.G. position

$$B = (M_{ost} \times (L - L_1) - M_{pr} \times L_1) / M_{rst} = \quad [\text{ mm}]$$

$$X = B + 50 = \quad [\text{ mm }]$$

$$\overline{X} = (X \times 100) / 1300 = \quad [\text{ \%MAC }]$$

Date: Performed by:

Figure 2-2

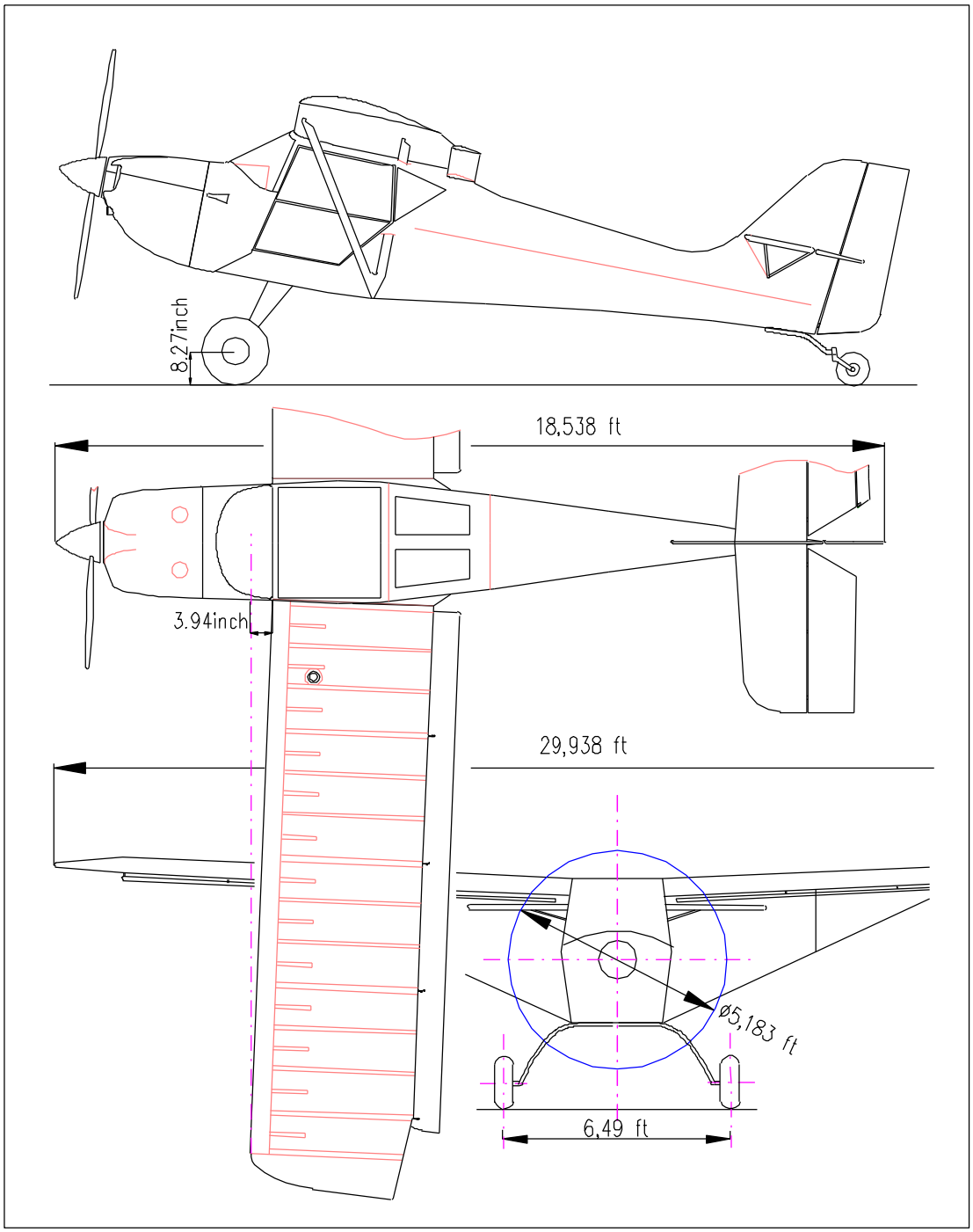

Section 5 (A220 taildragger)

Structures – Landing Gear and Brakes

Table of Contents **Page**

5.1 Landing Gear

5.2 General Description

The A220 taildragger has a two wheel main undercarriage with a tail wheel. The main landing gear is formed of composite construction, wheels with low-pressure tires of 800/6 size are provided with hydraulic disc brakes operated from control lever located on the rudder pedals. The tailwheel landing gear has a composite strut and the tailwheel is standard with a 6x2.25 sized tire.

5.3 Trouble Shooting

Trouble	Probable Cause	Remedy
Aircraft leans to one side	Incorrect tire inflation	Inflate to pressure specified in figure 1-1.
Tires wears excessively	Incorrect tire inflation	Inflate to pressure specified in figure 1-1.
	Dragging brakes	Refer to paragraph 5.28.
	Wheel bearing damaged	Install new part(s)

	Wheels out of balance	Correct in accordance with paragraph 5.22.
Wheel bounce evident on smooth surface	Out of balance condition	Correct in accordance with paragraph 5.22.

5.4 Main Gear

Figure 5-1. illustrates the main landing gear. The illustrations should be used in conjunction with the following procedures during removal and installation of component parts. Disassembly, inspection and repair, and reassembly of the main undercarriage configurations are described in separate paragraphs for each configuration. The aluminum wheels have two flanges and a hub that is manufactured by an Aeropro supplier. The flanges are attached to the wheel hub by 6mm thru-bolts and nylock nuts as shown in figure 5-2. During assembly of the main wheel the thru-bold nuts or cap screws, as applicable, shall be tightened evenly and torqued to the value specified in figure 5-2.

Figure 5-1

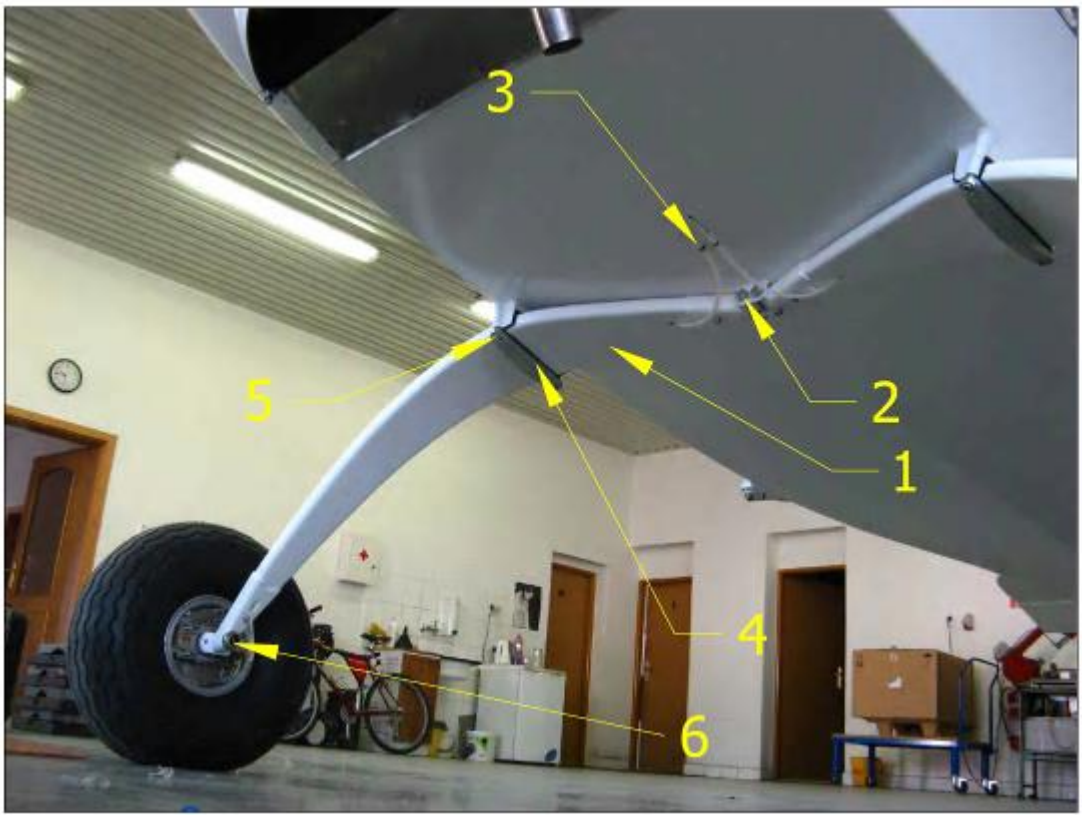

1. Main undercarriage legs
2. Upper holder and Screw for main holder 2xM10
3. Brake tubes
4. Bottom holder support
5. Screw for support holder 2xM8
6. Axles for main wheels

5.5 Removal and Installation

5.5.1 Required Tools: 10/11/17 mm wrench, Phillips head screwdriver, wire cutting pliers, bleed kit, etc.
5.5.2 Parts required: 2 x cotter pin (2 x 25 mm).
5.5.3 Level of Maintenance: **Heavy**
5.5.4 Certification required: **A&P Mechanic or LSA Repairman Maintenance**

The following procedural steps remove the landing gear as a complete assembly.
Refer to applicable paragraphs for removal of the individual components and continue according Figure 5-1

1. lift aeroplane and remove seat
2. remove the wheels
3. remove each cable
4. drain hydraulic brake fluid from brake lines.
5. disconnect hydraulic brake line at the brake line distributor
6. hoist or jack aircraft in accordance with figure 5-1
7. remove all bolts attaching main gear to fuselage
8. remove main gear assembly

Installation of the main gear has to be carried out in reverse order to removal.

5.6 Repair of fuselage and wheels fairings

5.6.1 Required Tools: As required
5.6.2 Parts required: New components as needed from Aeropro
5.6.3 Level of Maintenance: **Heavy**
5.6.4 Certification required: **A&P Mechanic or LSA Repairman Maintenance**
Repair of main gear is possible only in Aeropro company or an Aeropro-authorized company which has required experience and complete technology for welding.

5.7 Main Wheel Removal

5.7.1 Required Tools: 27mm socket (for axle nut), 13mm wrench, etc.
5.7.2 Parts required: None
5.7.3 Level of Maintenance: **Line**
5.7.4 Certification required: **A&P Mechanic, LSA Repairman Maintenance or Owner**
To remove main wheel follow steps 1 and 3, outlined in paragraph 5.5 and then proceed as described below (refer to figure 5-2.):

Figure 5-2 - note: older-type wheel is shown in the photos below - refer to A240 manual section for current information

see main wheel removal instructions in A240 section of this Maintenance Manual

Note	If tire, brake pads or brake disc have to be replaced, it is not necessary to drain and disconnect the brake line.

5.8 Main wheel disassembly -- see instructions in A240 section of this Maintenance Manual

Warning	Injury can result from attempting to separate wheel halves with the tire inflated. Avoid damaging wheel flanges when breaking tire beads loose. A scratch, gouge, or nick may cause wheel failure.

5.9 Main wheel inspection and repair -- see instructions in A240 section of Maintenance Manual

5.10 Main Wheel Reassembly -- see instructions in A240 section of this Maintenance Manual

Caution	Uneven or improper torque of thru-bolt nuts can cause failure of bolts, with resultant wheel failure.

Caution	Do not use aircraft hydraulic fluid, doing so will cause damage to the cylinder seals. Only DOT 4 automobile brake fluid must be used.

5.11 Tail Gear (see Figure 5-3)

5.12 Removal and Installation

5.12.1 Required Tools: screwdriver, 8/10/17 mm wrench
5.12.2 Parts required: locking nut (M6), and safety-wire (1.0 mm)
5.12.3 Level of Maintenance: **Heavy**
5.12.4 Certification required: **A&P Mechanic or LSA Repairman Maintenance**

a. Remove covering plate on both sides under horizontal stabilizer.
b. Lift and secure tail of aircraft to raise tail wheel off the floor.
c. Remove control bowden spring from tail wheel
d. Rubber cable from frame of tail leg
e. The tail wheel to be under laid so that it is freely suspended on the washer and the cable stop is to be loosened
f. Unscrew the screw that holds the frame of leg

5.13 Repair

If damage to any of the tail gear parts is detected then replace the affected parts, no part of the tail gear assembly can be repaired.

5.14 Tail Wheel Removal and Installation

5.15 Disassembly

5.19.1 Required Tools: 10 & 17 mm wrench.
5.19.2 Parts required: None
5.19.3 Level of Maintenance: **Light**
5.19.4 Certification required: LSA Repairman Maintenance or Owner

a. Remove tail wheel axle from wheel fairing then withdraw wheel from fork.

Note	Remember position of spacers for reassembly.

5.16 Inspection and Repair

5.20.1 Required Tools: Depending on condition
5.20.2 Parts required: Depending on condition
5.20.3 Level of Maintenance: **Line**
5.20.4 Certification required: **A&P Mechanic or LSA Repairman Maintenance**

a. Clean all metal parts in solvent and dry thoroughly.
b. Inspect wheel halves for cracks. Cracked wheel halves shall be discarded and new parts used. Sand out nicks, gouges, and corroded areas. When the protective coating has been removed, the area should be cleaned thoroughly, primed with zinc chromate and painted with aluminum lacquer.
c. Carefully inspect bearings for damage and discoloration or noises when rotating. Do not try to re-lubricate the sealed bearings. If in doubt about bearing condition, replace bearings.

Figure 5-3 - note: standard tailwheel shown - some A220's equipped with optional Matco wheel

1. Composite leg
2. Control lever for tail wheel
3. Springs
4. Control lever on the tail wheel fork
5. Tail wheel
6. Screw
7. Fork of the tail wheel
8. Axle for tail wheel

5.17 Reassembly

5.21.1 Required Tools: 10 & 17 mm wrench.
5.21.2 Parts required: Loctite 243 (medium strength), 5 x self-locking nut (M6), cotter pin (2 x 40 mm).
5.21.3 Level of Maintenance: **Light**
5.21.4 Certification required: **A&P Mechanic or LSA Repairman Maintenance**

a. Insert thru-bolts through wheel half.
b. Position tire on second wheel half
c. Place one wheel half to position on other wheel half. Apply a light force to bring wheel halves together.

d. While maintaining the light force assemble a washer and nut on one thru-bolt and tighten snugly.
e. Assemble the remaining washers and nuts on the thru-bolts and torque to 88 in. lb. (10 Nm). Use Loctite 243 to secure nuts.
f. Press one wheel bearing into wheel hub, ensure to place spacer into the wheel hub before installing the second bearing to the hub.

Caution	Uneven or improper torque of thru-bolt nuts can cause failure of bolts, with resultant wheel failure.

5.18 Wheel balancing

Since uneven tire wear is usually the cause of wheel unbalance, replacing the tire probably will correct this condition. Tire manufacturing tolerances permit a specified amount of static unbalance. If a wheel shows evidence of unbalance during service, it may be statically balanced.

5.19 Wheel steering system

Tail wheel steering is accomplished through the springs which are connected to the rudder. Steering springs assemblies connect the tail gear steering.

5.20 Steering adjustment

Since the tail wheel steering and rudder system are interconnected, adjustment to one system may affect the other system. Section 9 of the Aeropro A220 Maintenance Manual contains rigging instructions for the rudder system including info about the rudder centering system and rudder trim adjustment.

5.21 Brake system

5.22 General description

The hydraulic brake system consists of a master cylinders including a reservoir, located on the pedals.. Two brake hoses run from the master cylinders to each wheel brake caliper.

5.23 Trouble shooting

Trouble	Probable Cause	Remedy
Dragging Brakes	Brake lever binding.	Check and adjust properly.
	Worn or broken piston return spring (in master cylinder).	Install a new cylinder.
	Restrictions in hydraulic lines or restriction in master cylinder valve.	Drain brake lines and clean inside of the brake line with filtered compressed air.
	Worn, scored or warped brake disc.	Install new disc and brake linings.
	Damaged or accumulated dirt restricting free movement of heel brake parts.	Clean and repair or install new parts as necessary.

Brakes Fail to Operate	Leak in system.	Install new parts.
	Air in system.	Bleed system.
	Lack of fluid in master cylinder.	Fill and bleed system.
	Master cylinder defective.	Install a new cylinder.

5.24 Brake master cylinders (refer to figure 5-4.)

The brake master cylinder, located on the pedals, is activated by gently pushing on the brake pedals positioned on the cockpit floor. A small reservoir is incorporated onto the master cylinder for the fluid supply.

Figure 5-4 - shown are old brake cylinders - A220's since 2009 have red Beringer brake cylinders

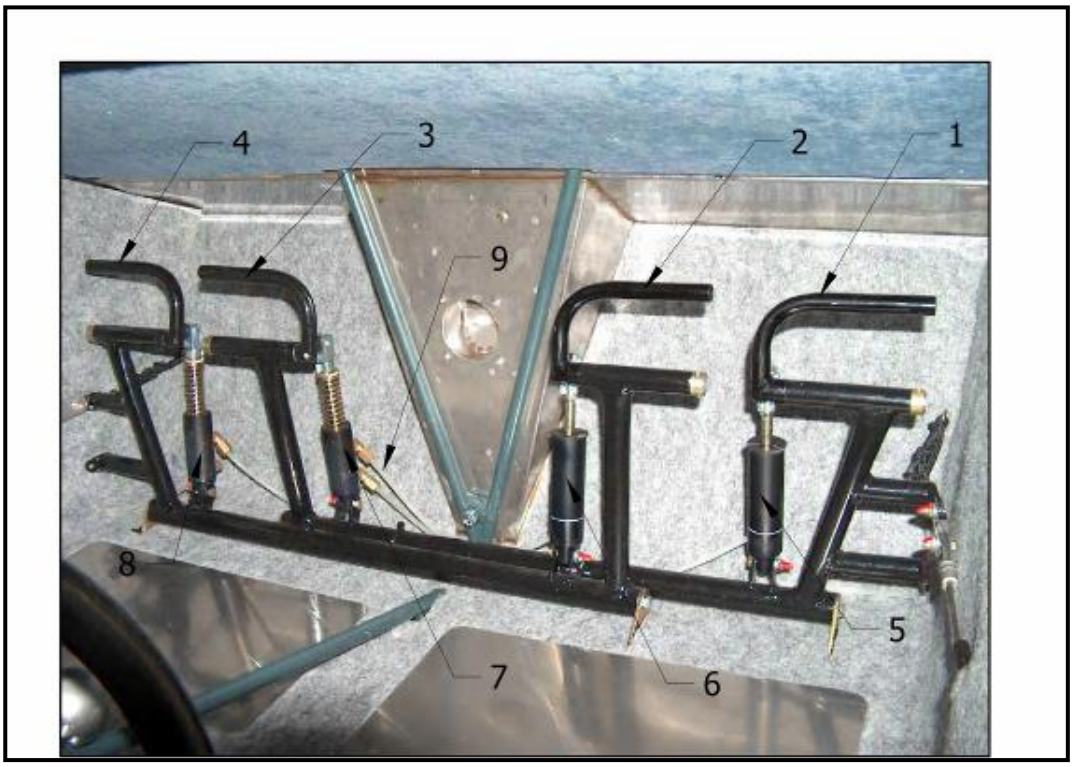

note: photo above is showing older brake system - see separate information regarding the Beringer brake cylinders and the brake fluid reservoir in 2009 and newer A220's

note: photo above does NOT show the rudder-centering system and rudder trim adjustment system on all Aeropro aircraft starting in 2012 - see Section 9 for information

1. brake pedal on the right side
2. brake pedal on the right side
3. brake pedal on the left side
4. brake pedal on the left side
5. master cylinder with fluid reservoir for right wheel
6. master cylinder with fluid reservoir for left wheel
7. master cylinder for right wheel
8. master cylinder for left wheel
9. hydraulic tube for connection master cylinder and brake